WINDSOR

chariot

iScrub

Operating instructions (ENG)

MODELS: ***CSX24***
10061090

CSX24X
10061100

CSXE24
10061120

CS26SP
10061160

CS26SPX
10061170

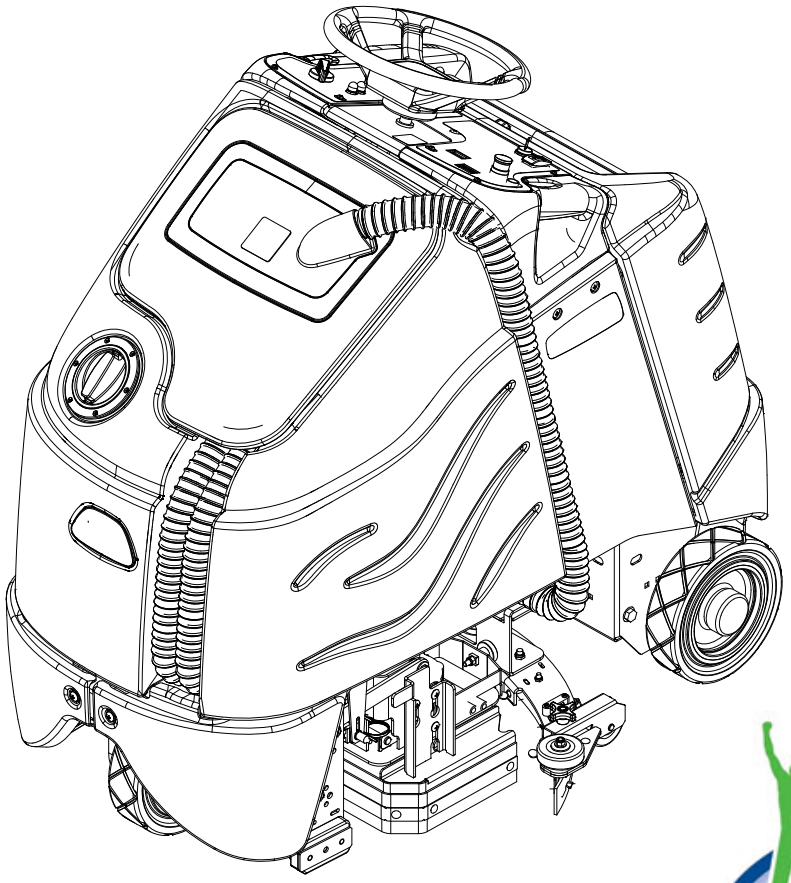

national
EVERYTHING WHOLESALE
Where Unsung Heroes Make It Happen™
800.647.2737 NationalEW.com
Wholesale Parts Pricing

Read these instructions before using the machine.

IPX4

86317500-AD
04/22/10

Model: _____

Date of Purchase: _____

Serial Number: _____

Dealer: _____

Address: _____

Phone Number: _____

Sales Representative: _____

OVERVIEW

The Chariot Scrubber is a battery powered, stand-on, hard floor scrubber intended for commercial use. The appliance applies a cleaning solution onto a hard floor, scrubs the floor with brushes or pads, and then vacuums the soiled water back into the recovery tank.

Machine Data Log/Overview 2
Table of Contents 3
How to Use This Manual 4

Safety
IMPORTANT SAFETY INSTRUCTIONS 5
HAZARD INTENSITY LEVEL 6
Safety Label Locations 7
Technical Specifications 8

Operations
How This Machine Works 10
Components 11
Drive Controls 12
Scrub Controls 16
Scrub Controls-Squeegee 18
Pre-Run Machine Inspection 20
Starting Machine 20
Emergency Stop Procedures 20
Filling Solution Tank 21
Normal Scrubbing 21
To Begin Scrubbing 22
Priming Pump 22
To Stop Scrubbing 23
Double Scrub 23
Emptying and Cleaning Tanks 24

Maintenance
Service Schedule 26
Batteries 27
Squeegee 31
Squeegee Blades 32
Maintenance 34
Scrub Brushes 34
Scrub Deck 35
To Replace Scrub Brush Motors 36
Brush Motor Carbon Brush Replacement 36
Actuator Scrub Deck Removal / Replacement 37
Scrub Deck Actuator Adjustment 37
Circuit Protection 38
Solution Strainer & Pump-Disk 39
Solution Strainer & Pump-Cylindrical 40
Vacuum & Float Shutoff 42
Drive Motor 44
Electric Parking Brake Engagement 45
Drive Motor Carbon Brush Replacement 46
Removing or Replacing Bag 47
Transporting 48
Troubleshooting 49

Parts
Bumper 54
Control Panel 56
Control Panel Housing 58
Decal 60
Frame-Lower 62
Frame-Upper 64
Pedal Platform 66
Rear Cover 70
Scrub Brush/Pad Driver-Disk 72
Scrub Brush/Pad Cylindrical 74
Scrub Deck - Disk 76
Scrub Deck-Cylindrical 78
Scrub Deck Mounting-Cylindrical 80
Scrub Deck Lift-Disk 82
Scrub Deck Actuator-Cylindrical 84
Scrub Deck Skirts-Disk 86
Scrub Deck Aqua-Mizer™ 88
Solution-Disk 90
Solution-Cylindrical 92
Squeegee-Disk 94
Squeegee Lift-Disk 96
Squeegee-Cylindrical 98
Squeegee Lift Assembly -Cylindrical - From Serial Number ** 100
Squeegee Lift-Cylindrical 102
Squeegee Swing 104
Steering 106
Tank 108
Vacuum 110
Wheel-Front Drive 112
Wheel-Rear 114
Wiring-Components 116
Wiring-Batteries 118
Wiring-Control Panel 120
Wiring-Drive Motor 122
Wiring-Main Harness 124
Wiring-Pedal Platform 126
Wiring-Disk 128
Wiring-Cylindrical 131
Hose Diagram-Disk 134
Hose Diagram-Cylindrical 135
Suggested Spare Parts 136

OPTIONS
Battery Cart-Option 138
Seat-Option 142
Warning Lights-Option 144
Serial Numbers 146

This manual contains the following sections:

- HOW TO USE THIS MANUAL
- SAFETY
- OPERATIONS
- MAINTENANCE
- PARTS LIST

The HOW TO USE THIS MANUAL section will tell you how to find important information for ordering correct repair parts.

Parts may be ordered from authorized Windsor dealers. When placing an order for parts, the machine model and machine serial number are important. Refer to the MACHINE DATA box which is filled out during the installation of your machine. The MACHINE DATA box is located on the inside of the front cover of this manual.

Model: _____

Date of Purchase: _____

Serial Number: _____

Dealer: _____

Address: _____

Phone Number: _____

Sales Representative: _____

The model and serial number of your machine are located below the battery compartment of the machine.

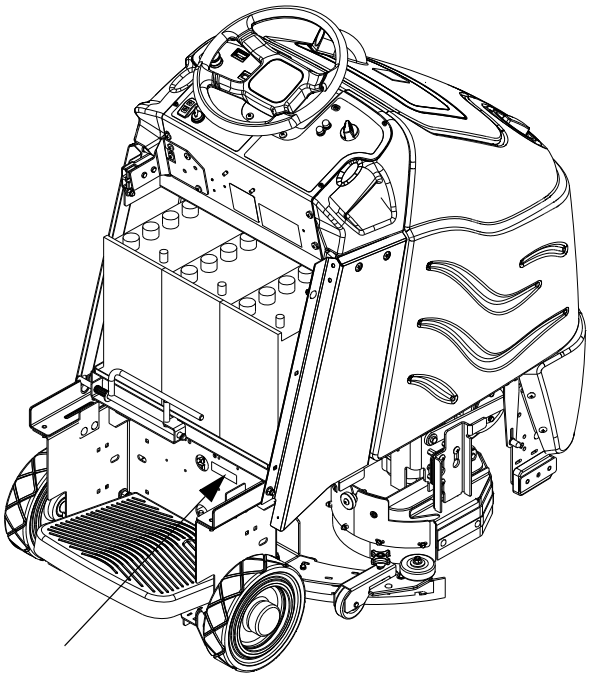

The SAFETY section contains important information regarding hazard or unsafe practices of the machine. Levels of hazards are identified that could

result in product or personal injury, or severe injury resulting in death.

The OPERATIONS section is to familiarize the operator with the operation and function of the machine.

The MAINTENANCE section contains preventive maintenance to keep the machine and its components in good working condition. They are listed in this general order:

- Batteries
- Scrub Brushes
- Adjusting Squeegee
- Service Schedule
- Machine Troubleshooting

The PARTS LIST section contains assembled parts illustrations and corresponding parts list. The parts lists include a number of columns of information:

REF - column refers to the reference number on the parts illustration.
PART NO. - column lists the part number for the part.
PRV NO. - Reference No.
QTY - column lists the quantity of the part used in that area of the machine.
DESCRIPTION - column is a brief description of the part.
SERIAL NO. FROM - If this column has an (*) and a Reference number, see the SERIAL NUMBERS page in the back of your manual. If column has two asterisk (**), call manufacturer for serial number. The serial number indicates the first machine the part number is applicable to. The main illustration shows the most current design of the machine. When a boxed illustration is shown, it displays the older design.
NOTES - column for information not noted by the other columns.

NOTE: *If a service or option kit is installed on your machine, be sure to keep the KIT INSTRUCTIONS which came with the kit. It contains replacement parts numbers needed for ordering future parts.*

NOTE: *The number on the lower left corner of the front cover is the part number for this manual.*

IMPORTANT SAFETY INSTRUCTIONS

When using an battery powered appliance, basic precaution must always be followed, including the following:

READ ALL INSTRUCTIONS BEFORE USING THIS MACHINE.

⚠WARNING:

T**o reduce the risk of fire, electric shock, or injury:**

Use only indoors. Do not use outdoors or expose to rain.

Use only as described in this manual. Use only manufacturer's recommended components and attachments.

If the machine is **not working properly**, has been dropped, damaged, left outdoors, or dropped into water, return it to an authorized service center.

Do not operate the machine with any openings blocked. Keep openings free of debris that may reduce airflow.

This machine **is not** suitable for picking up hazardous dust.

Machine can cause a fire when operating near flammable vapors or materials. Do not operate this machine near flammable fluids, dust or vapors.

This machine is suitable for commercial use, for example in hotels, schools, hospitals, factories, shops and offices for more than normal housekeeping purposes.

Maintenance and repairs **must be done** by qualified personnel.

If foam or liquid comes out of machine, **switch off immediately**.

Disconnect battery before cleaning or servicing.

Before the machine is discarded, the batteries **must be removed** and properly disposed of.

Make sure all warning and caution labels **are legible and properly attached** to the machine.

During operation, attention shall be paid to other persons, especially children.

Before use all covers and doors shall be put in the positions specified in the instructions.

When leaving unattended, secure against unintentional movement.

The machine shall only be operated by instructed and authorized persons.

When leaving unattended, switch off or lock the main power switch to prevent unauthorized use.

Only chemicals recommended by the manufacturer shall be used.

This appliance has been designed for use with the brushes specified by the manufacturer. The fitting of other brushes may affect its safety.

Do not use on surfaces having a gradient of over 10% (6 degrees).

SAVE THESE INSTRUCTIONS

The following symbols are used throughout this guide as indicated in their descriptions:

HAZARD INTENSITY LEVEL

There are three levels of hazard intensity identified by signal words -**WARNING** and **CAUTION** and ***FOR SAFETY***. The level of hazard intensity is determined by the following definitions:

⚠WARNING:

WARNING - Hazards or unsafe practices which COULD result in severe personal injury or death.

⚠CAUTION:

CAUTION - Hazards or unsafe practices which could result in minor personal injury or product or property damage.

FOR SAFETY: To Identify actions which must be followed for safe operation of equipment.

Report machine damage or faulty operation immediately. Do not use the machine if it is not in proper operating condition. Following is information that signals some potentially dangerous conditions to the operator or the equipment. Read this information carefully. Know when these conditions can exist. Locate all safety devices on the machine. Please take the necessary steps to train the machine operating personnel.

FOR SAFETY:

DO NOT OPERATE MACHINE:
Unless Trained and Authorized.
Unless Operation Guide is Read and understood.
In Flammable or Explosive areas.
In areas with possible falling objects.

WHEN SERVICING MACHINE:

Avoid moving parts. Do not wear loose clothing; jackets, shirts, or sleeves when working on the machine. Use Windsor approved replacement parts.

⚠WARNING:

Batteries emit hydrogen gas. Explosion or fire can result. Keep sparks and open flame away. Keep solution tank in raised position when charging. Keep sparks and flames away from the batteries. Do not smoke around batteries.

⚠WARNING:

Disconnect batteries before working on machine. Only qualified personnel should work inside machine. Always wear eye protection and protective clothing when working on or near batteries. Avoid skin contact with the acid contained in the batteries.

⚠WARNING:

Never allow metal to lie across battery tops.

Safety Label Locations

These drawings indicate the location of safety labels on the machine. If at any time the labels become illegible, promptly replace them.

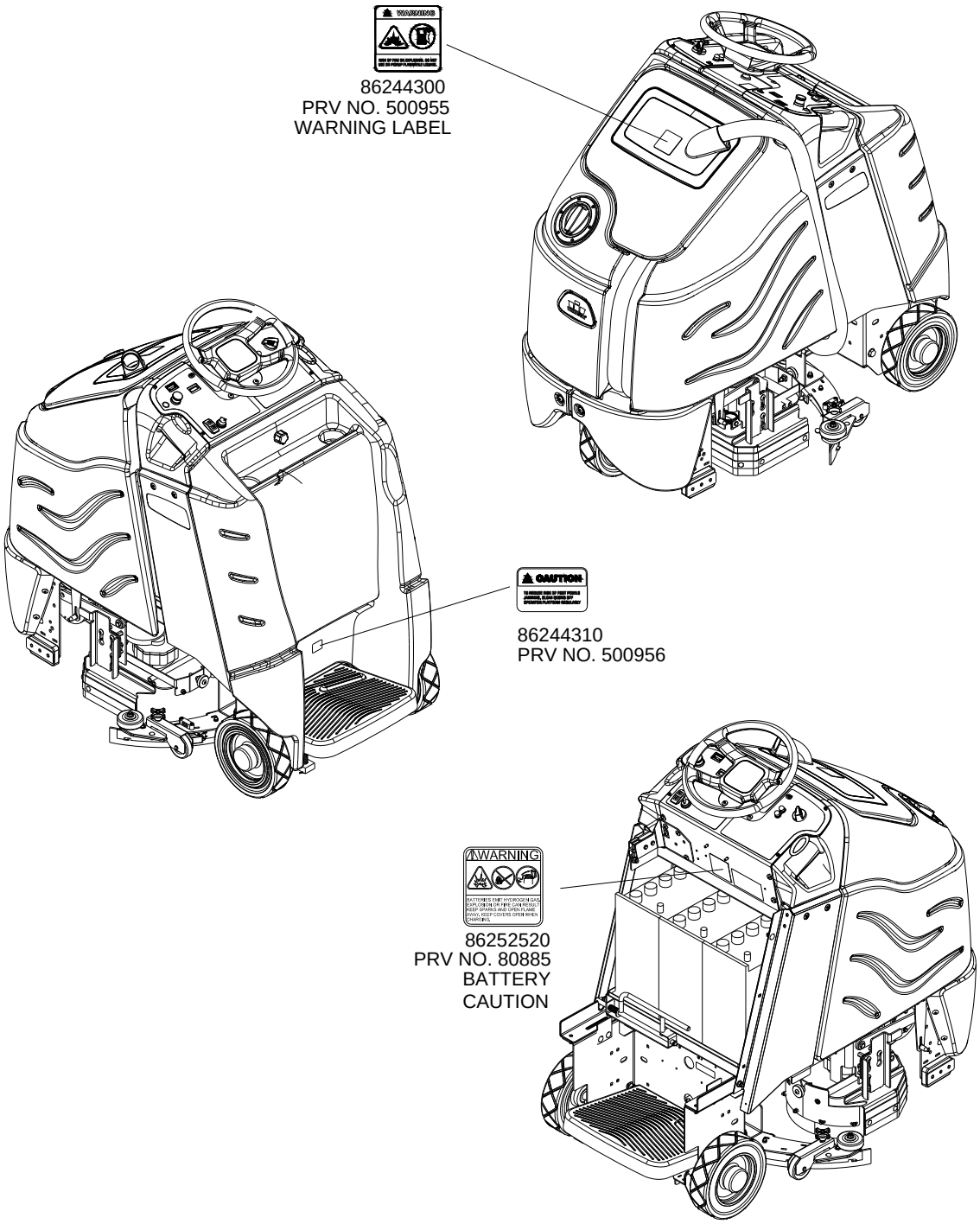

Technical Specifications

ITEM	DIMENSION/CAPACITY
Nominal power	1800 W
Rated Voltage	36 Volts DC
Rated Amperage	50 amps
Batteries	3 X12 Volt 195-215 AH @ 20 hr. rate
Battery Compartment Dimensions	21 in. x 16 in. x 17 in. tall (533mm x 406mm x 432mm)
Scrub Brush Motors - Disk Machine	2 x .3 HP (190 W)
Scrub Brush Motors - Cylindrical Machine	2 x .75 HP (560 W)
Vacuum Motor(s)	.63 HP (470 W)
Maximum flow rate of vacuum motor	72 cfm (33.98 liters per second)
Maximum suction of vacuum motor	47.3 inches of water (11.7 kPa)
Propelling Motor	.75 HP (560 W)
Mass (GVW)	1245 lbs (565 kg)
Weight empty without batteries	558 lbs (253 kg)
Solution Control	1.3 GPM pump, fully variable with automatic shut-off in neutral
Solution capacity	25 gal (95 L)
Recovery capacity	25 gal (95 L)
Scrub brush diameter - Disk Machine	12 inch (305 mm)
Scrub brush diameter - Cylindrical Machine	4.1 inch (105 mm)
Scrub brush pressure	0-150lbs (0-667N)
Scrub brush speed - Disk Machine	300 rpm
Scrub brush speed - Cylindrical Machine	500 rpm-slow, 800 rpm-medium, 1300 rpm-fast
Tires	10 in. (254mm) Solid Scrubber Compound
Foundation Pressure	104 psi (715 Kpa)
Maximum Speed	3.5 miles/hour (5.6 Km/hour)
Theoretical Coverage	24,200 ft^2/hr @ 2.5 mph with 2 in. overlap
Frame Construction	Powder coated steel
Brake	Electrical parking brake,sets automatically whenever operator steps off platform or engages emergency stop.
Minimum aisle u-turn width	56 in. (1425 mm)
Maximum rated climb and descent angle	10%

ITEM	MEASURE
Height	50.6 inches (1285 mm)
Length	52.5 inches (1330 mm)
Width without squeegee	26.5 inches (670 mm)
Width of squeegee - Disk Machine	32.7 inches (830 mm)
Width of squeegee - Cylindrical Machine	37 inches (970 mm)
Width of scrub path - Disk Machine	24 inches (610 mm)
Width of scrub path - Cylindrical Machine	26 inches (650 mm)

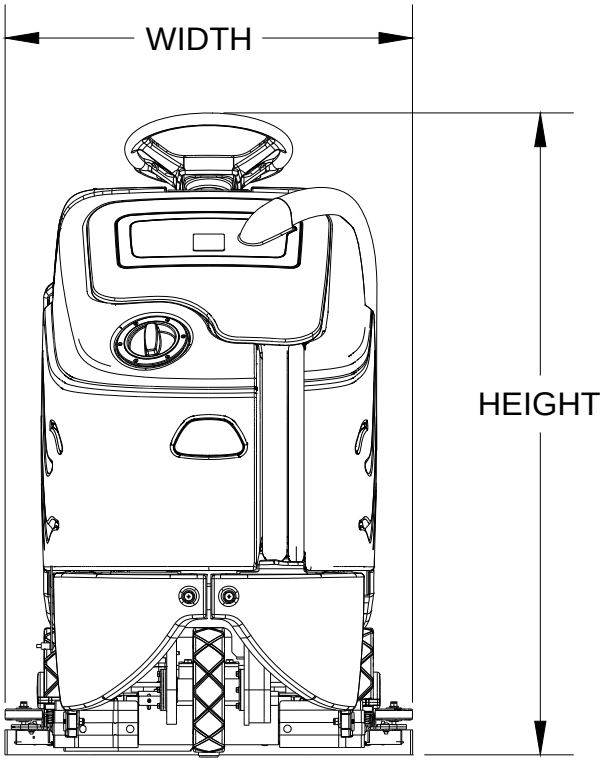

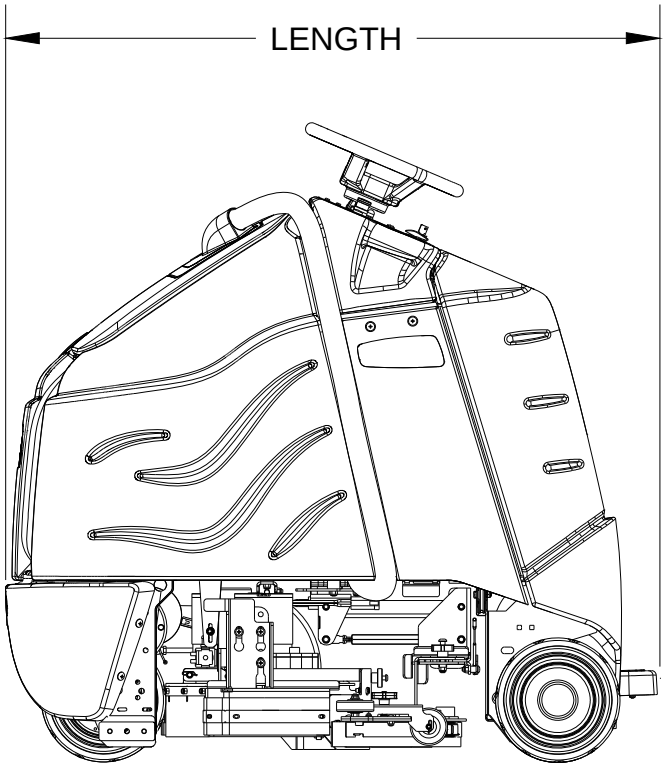

SPECIAL NOTES:

The sound pressure level at the operator's ear was measured to be 68 dBA (Disk), 76dBA (cylindrical). This was a nearfield, broad-band measurement taken in a typical industrial environment on a tile floor. This appliance contains no possible source of impact noise. The instantaneous sound pressure level is below 63 Pa.

The weighted root mean square acceleration at the operator's arms was measured to be below 3.6m/s² and at the operators feet/pedal was measured to be 0.7m/s². The measurement and related calculations were made in accordance with ISO 5349, references Standard EN 60335-2-72.

This appliance is not intended for use by persons (including children) with reduced physical, sensory or mental capabilities, or lack of experience and knowledge, unless they have been given supervision or instruction concerning use of the appliance by a person responsible for their safety. Children should be supervised to ensure that they do not play with the appliance.

How This Machine Works

The Chariot® is a battery powered, self-propelled, hard floor scrubber intended for commercial use. The appliance applies a cleaning solution onto a hard floor, scrubs the floor with brushes, and then vacuums the soiled water back into the recovery tank.

The machine's primary systems are the solution system, scrub system, recovery system, and operator control system.

The function of the solution system is to store cleaning solution and deliver it to the scrub system. The solution system consists of the solution tank, strainer, pump, valve. The solution tank stores cleaning solution (water and detergent) until it is delivered to the scrub system. The strainer protects the pump from debris. The valve automatically prevents solution flow unless the scrub brushes are turned on and the machine is being propelled.

The function of the scrub system is to scrub the floor. The disk scrub system consists of two rotary type disk scrub brushes, motors, scrub deck skirt and lift actuator. The brushes scrub the floor as the motors drive the brushes. The brush drive hubs allow the scrub brushes to follow irregularities and changes in the floor without loosing contact with the floor. The scrub deck skirts control the cleaning solution on the floor so that the squeegee can pick it up.

The scrub plus system consists of two cylindrical type brushes, motors, scrub deck side squeegees, hopper, lift actuator. The cylindrical scrub head is designed to eliminate debris that may be caught in the squeegee while scrubbing. Water is applied to the first scrubbing brush turning in a clockwise rotation when viewed from the right side of machine. The first brush scrubs dirt and debris between the brushes. The second scrubbing brush, turning in a counter clockwise rotation, picks up debris and throws it into a removable hopper. Water is allowed to drain out the hopper into the squeegee path where it is recovered from the floor.

The scrub deck side squeegees control the cleaning solution on the floor so that the squeegee can pick it up.

The function of the recovery system is to vacuum the soiled water back into the recovery tank. The recovery system consists of the squeegee, vacuum motor, float ball filter, recovery bag. The squeegee wipes the dirty solution off the floor as the machine moves forward. The vacuum motor provides suction to draw the dirty solution off the floor and into the recovery bag. The float ball filter protects the vacuum fan from debris and foam. The recovery bag stores the dirty solution.

The function of the operator control system is to control the direction and speed of the machine. The directional control system consists of the direction control drive reset switch, throttle pedal, emergency stop/brake switch, steering wheel, propel controller, and drive wheel. The directional control drive reset switch signals forward or reverse direction and makes sure the operator is on platform before machine will propel. The controller interprets signals from the throttle pedal to command the drive wheel to propel or slow the machine. The steering wheel points the drive wheel in the direction desired by the operator. The parking brake automatically engages when the operator steps off the platform. The emergency stop/brake can be used to hold the machine on slopes.

Components

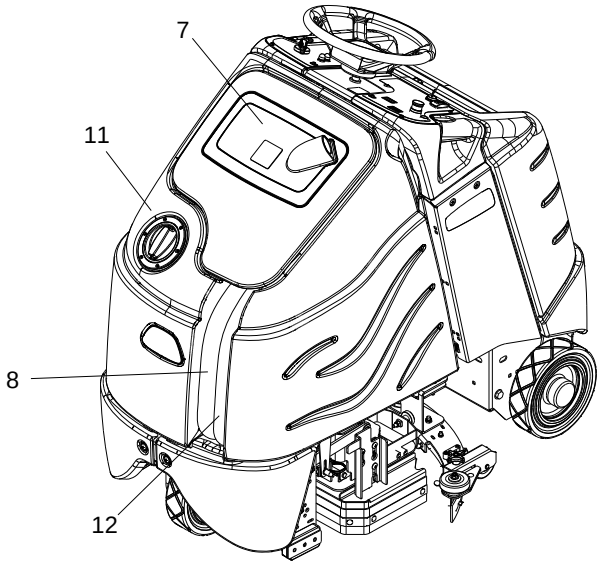

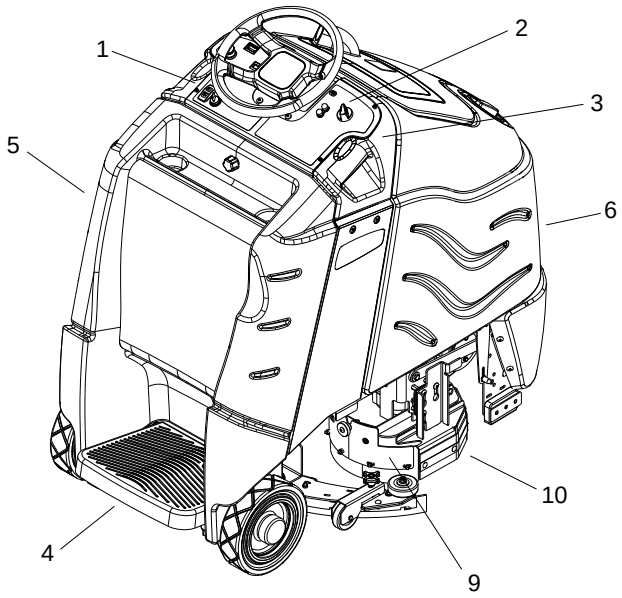

1. Control Panel-Drive
2. Control Panel-Scrub
3. Control Housing
4. Pedal Platform
5. Rear Cover
6. Tank
7. Recovery Dome
8. Recovery Drain Hose
9. Scrub Deck Aqua-Mizer™
10. Scrub Deck Skirts/Side Squeegees
11. Solution Cover
12. Solution Drain Hose

Drive Controls

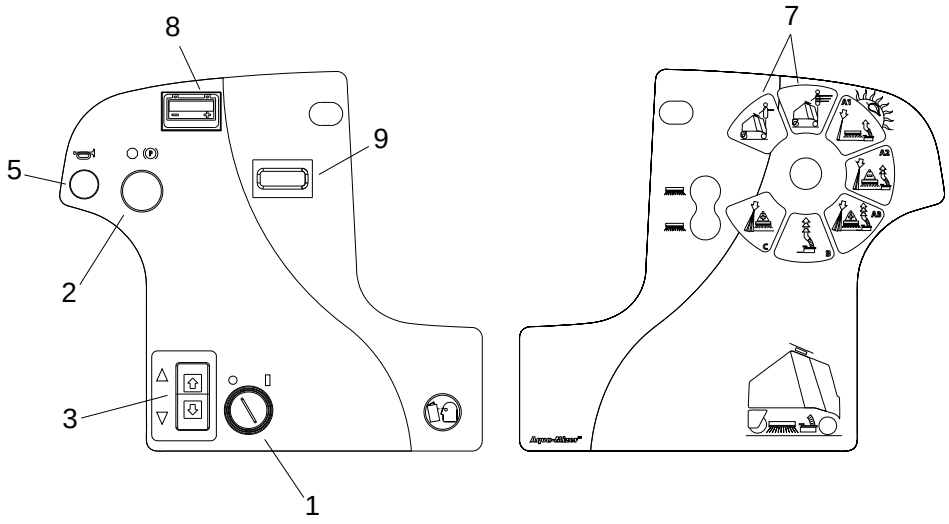

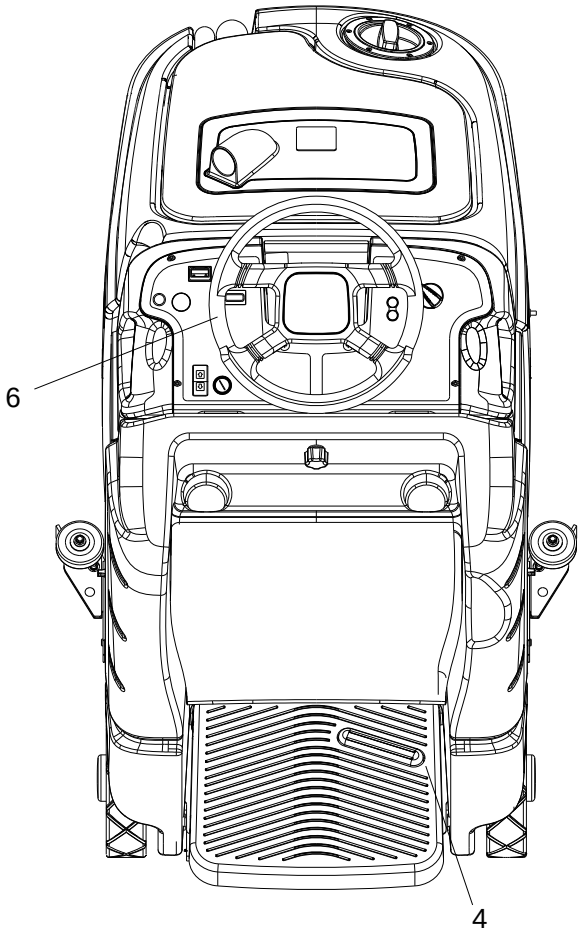

1. **Key Switch**
2. **Emergency Stop/Brake Switch**
3. **Directional Control / Drive Reset Switch**
4. **Throttle Pedal**
5. **Horn Button**
6. **Steering Wheel**
7. **Speed Control**
8. **Battery Discharge Indicator**
9. **Hour Meter**

1. KEY SWITCH

Controls the power for machine functions.

To turn the machine power on, rotate key clockwise.

To turn the machine off, rotate key counterclockwise.

When the key is turned on the battery symbol will flash while the system runs self-diagnostics and returns scrub deck and squeegee to their raised positions, if necessary. The controller will not respond to other commands until this routine is complete.

2. EMERGENCY STOP/BRAKE SWITCH

This safety feature is designed to cut all power to the machine at any time and apply parking brake.

To shut the machine power off, push the Emergency Stop Switch, this will also engage the parking brake and cause the machine to stop immediately.

To reset the machine, rotate the switch clockwise.

3. DIRECTIONAL CONTROL / DRIVE RESET SWITCH

This safety feature is designed to ensure safe engagement of propel drive. Each time the machine power is turned on, or each time an operator steps on to the platform, the Drive Reset Switch must be pushed before machine will propel.

Controls the direction of travel of the vehicle. The lit arrow on the switch indicates direction of travel.

To travel forward, press the top of the switch.

To travel in reverse, press the bottom of the switch.

4. **THROTTLE PEDAL**

Controls the speed of the vehicle within the speed control setting selected. Pressing the pedal causes the machine to travel in the direction selected by the Directional Control Switch.

To increase speed, increase pressure on the pedal.

To decrease speed, decrease pressure on the pedal.

5. HORN BUTTON

The horn is activated by pressing the horn button.

6. STEERING WHEEL

The steering wheel turns the front wheel causing the machine to change direction.

7. SPEED CONTROL

Controls the maximum speed of the machine. There are two transport settings, slow and fast.

To change speed, rotate the dial to either slow or fast position. The slow position is to the left (counterclockwise), fast to the right (top position).

The throttle pedal will always regulate the speed between 0 and maximum

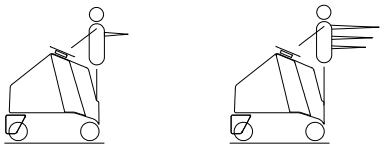

SLOW FAST

8. BATTERY CHARGE LEVEL INDICATOR

Indicates the charge level of the batteries.

The meter display is divided into 10 vertical bars. Bars illuminated on the far right indicate full charge. Bars flashing near the left side indicate the batteries should be recharged. Further operation of the machine could damage the machine or the batteries.

When the machine is left overnight with less than a full charge, the display may initially indicate a full charge. It will also indicate a full charge if the batteries are disconnected, then reconnected. After a few minutes of operation the meter will give the correct charge level.

9. HOUR METER

Records the number of hours the machine has been in scrubbing operation. This information is useful in determining when to service the machine.

Scrub Controls

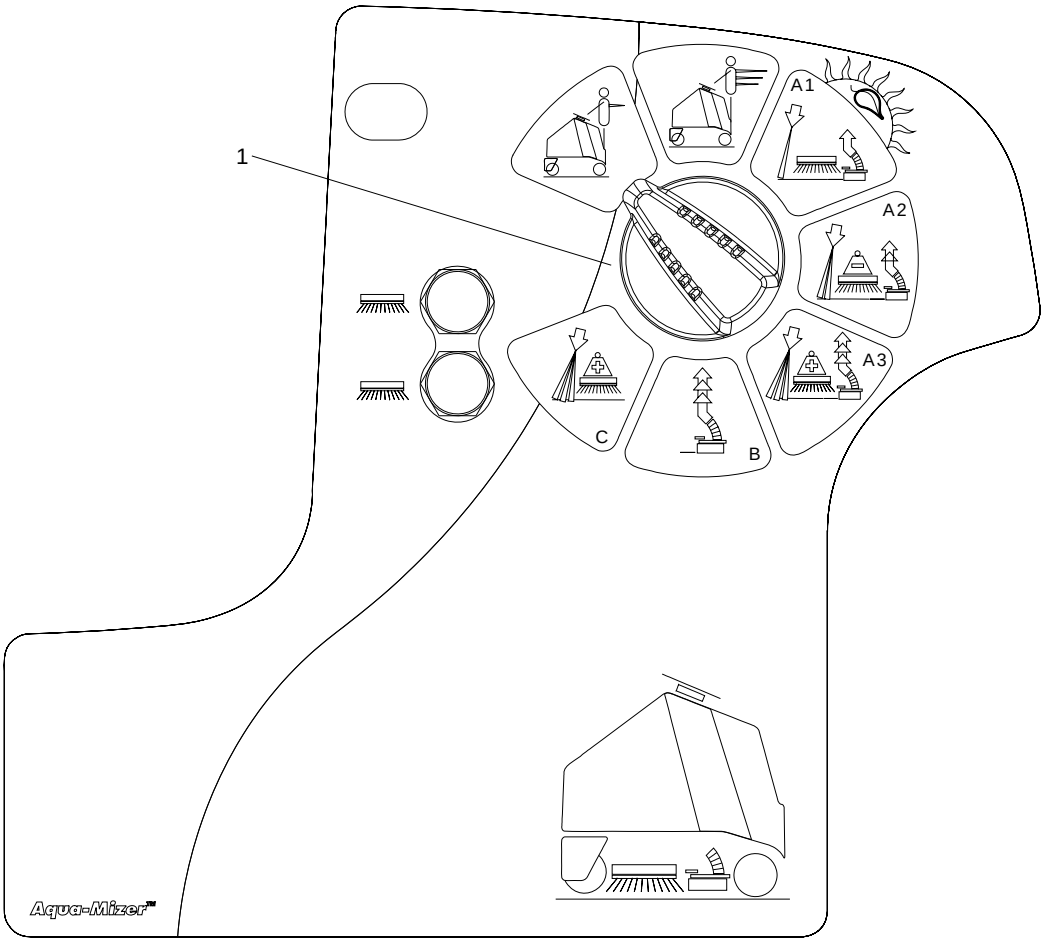

1. **FUNCTION MODE SWITCH**

The first two positions are for transport only. See drive controls section.

A1 - Daytime cleaning/light cleaning

This mode is used for light cleaning. In this mode the machine will propel at a maximum of medium speed. The scrub deck will automatically lower to a lower down pressure setting. The water will flow at a low rate. Water will automatically shut off in neutral and restart when pressure resumes. The squeegee will automatically lower and vacuum will continue on at a low flow. (Squeegee will continue to lower and the vacuum will continue to run in neutral. The squeegee will raise in reverse.)

A2 - Medium scrub level cleaning

This mode is used for medium level cleaning. In this mode the machine will propel at a maximum of medium. The scrub deck will lower at a medium down pressure. The water will flow at a medium rate. The vacuum will flow at a a medium.

A3 - Heavy scrub level cleaning

This mode is used for heavy level cleaning. In this mode the machine will propel at a maximum of slow speed. The scrub deck will lower to a heavy down pressure. The water will flow at a high rate. The vacuum will flow at a high rate.

B - Vacuum only mode

This mode is used for picking up solution only. The brushes and water will both be up and off. In this mode the machine will propel at a maximum of medium speed. The squeegee will automatically lower and the vacuum will come on. The vacuum will flow at a high rate. The squeegee will raise during reverse propelling. The squeegee and vacuum will remain down and on in neutral propel.

C - Double Scrub cleaning

This mode is used for putting down solution and scrubbing without picking it back up. In this mode the machine will propel at a maximum speed of slow. The scrub deck will automatically lower to a heavy scrub level. The solution will flow at a high rate. The brushes and water will shut off and raise when the machine is in neutral. They will resume when propelling is resumed.

1. FUNCTION MODE SWITCH (CYLINDRICAL)

The first two positions are for transport only. See drive controls section.

A1-Daytime cleaning/light cleaning

This mode is used for light cleaning. In this mode the machine will propel at a maximum of medium speed. The scrub deck will automatically lower and spin brushes at low speed. The water will flow at a low rate. Water will automatically shut off in neutral and restart when propel resumes. The squeegee will automatically lower and vacuum will continue on at a low flow. (Squeegee will continue to lower and the vacuum will continue to run in neutral. The squeegee will raise in reverse.)

A2-Medium scrub level cleaning

This mode is used for medium level cleaning. In this mode the machine will propel at a maximum of medium speed. The scrub deck will lower and spin brushes at medium speed. The water will flow at a medium rate. The vacuum will flow at a medium rate.

A3-Heavy scrub level cleaning

This mode is used for heavy level cleaning. In this mode the machine will propel at a maximum of slow speed. The scrub deck will lower and brushes spin at high speed. The water will flow at a high rate. The vacuum will flow at a high rate.

B-Vacuum only mode

This mode is used for picking up solution only. The brushes and water will both be up and off. In this mode the machine will propel at a maximum of medium speed. The squeegee will automatically lower and the vacuum will come on. The vacuum will flow at a high rate. The squeegee will raise during reverse propelling. The squeegee and vacuum will remain down and on in neutral propel.

C-Double Scrub cleaning

This mode is used for putting down solution and scrubbing without picking it back up. In this mode the machine will propel at a maximum speed of slow. The scrub deck will automatically lower and spin brushes at high speed. The solution will flow at a high rate. The brushes and water will shut off and raise when the machine is in neutral. They will resume when propelling is resumed.

Scrub Controls-Squeegee

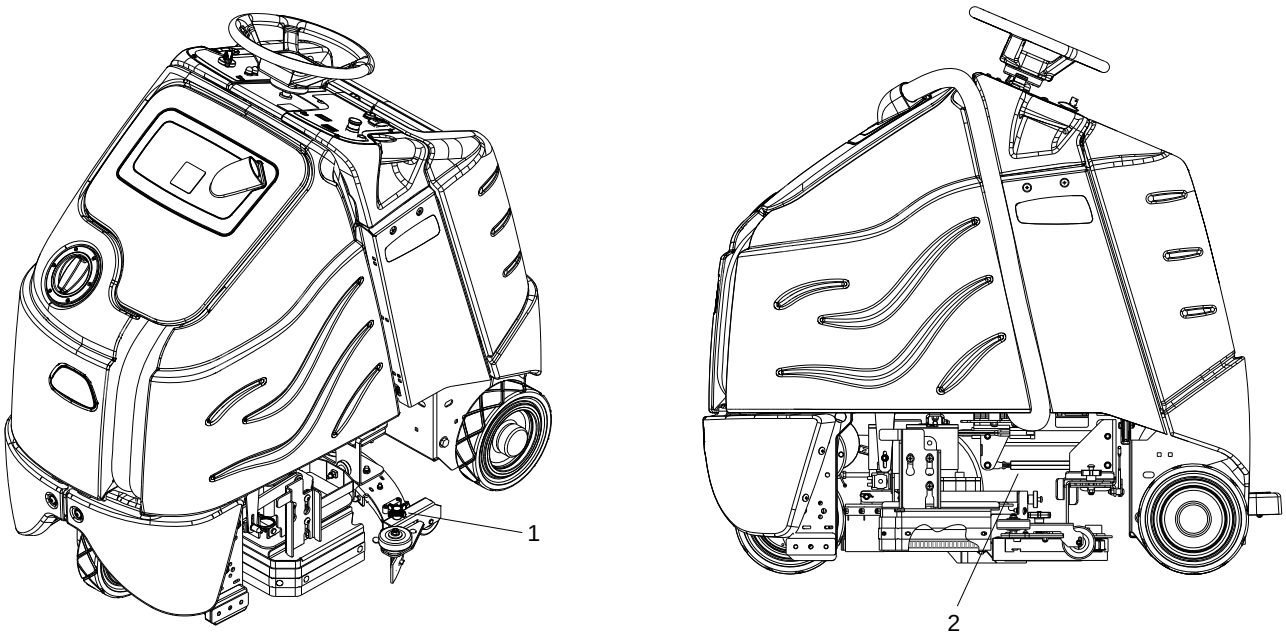

1.Squeegee Deflection Adjustment Knobs

2.Squeegee Pitch Adjustment Rod

Squeegee Deflection Adjustment Knobs (Disk Scrubber)

Adjusts the deflection along the entire length of the squeegee.

To increase squeegee blade deflection, turn the two knobs at the ends of the squeegee counterclockwise.

To decrease squeegee deflection, turn the two knobs at the ends of the squeegee clockwise.

Squeegee Pitch Adjustment Rod (Disk Scrubber)

Adjusts the deflection at the ends of the squeegee.

To increase squeegee blade deflection at the ends, turn rod counterclockwise.

To decrease squeegee blade deflection at the ends, turn rod clockwise.

Squeegee Deflection Adjustment (Cylindrical Scrubber)

Adjusts the deflection along the entire length of the squeegee.

To increase squeegee blade deflection, loosen the bolt at the wheel axle and raise in the slots.

To decrease squeegee deflection, lower the wheel axle in the slots.

Squeegee Pitch Adjustment (Cylindrical Scrubber)

No adjustments are necessary for this squeegee style.

Machine Operation

Pre-Run Machine Inspection

Do a pre-run inspection to find possible problems that could cause poor performance or lost time from break-down. Follow the same procedure each time to avoid missing steps.

NOTE: *See maintenance section for pre-run machine inspection checklist items.*

Starting Machine

NOTE: *Perform pre-run machine check before operating machine.*

FOR SAFETY: Before starting machine, make sure that all safety devices are in place and operating properly.

1. The operator should be on the pedal platform. The throttle pedal must be in the neutral position.
2. Turn the machine power on by turning key switch clockwise to the "ON" position.
3. Check the position of the Directional Control Switch to make sure the machine will travel in the direction intended.
4. Press the Drive Reset Directional Control Switch to reset and set the intended direction for travel.
5. Press lightly on the throttle pedal with right foot

Emergency Stop Procedures

1. Push in emergency stop button. This will also engage the parking brake and cause the machine to stop immediately.

Filling Solution Tank

FOR SAFETY: Before leaving or servicing machine; stop on level surface, turn off machine and remove key.

1. Turn the machine power off.
2. Remove solution cover.
3. Fill the solution tank with clean water, leaving enough room for the required amount of cleaning solution. The solution tank capacity filled to fill inlet is 25 gallons (95 liters). The water must not be hotter than 140° F (60°C) to prevent damage to the tank.
4. Measure the chemical into the solution tank. The solution cover is also a 2 oz. (60 ml) measuring cup. Liquid chemicals should be added to the solution tank after filling with water. Dry chemicals should be thoroughly mixed before being added into solution tank. Commercially available, high alkaline floor cleaners, are suitable for use in the solution system.

   NOTE: *Read the chemical manufacturers recommended proportion instructions.*

5. Replace solution tank cover.

⚠WARNING:

Flammable materials can cause an explosion or fire. Do not use flammable materials in the tanks

Normal Scrubbing

Plan the scrubbing pattern in advance. The longest track is around the perimeter of the area to be cleaned. For efficient operation, the runs should be the longest possible without turning, stopping, or raising or lowering scrub deck/squeegee.

In order to achieve the best possible results, the area which is to be cleaned should be swept before scrubbing. Large debris, strings and wire must be removed to prevent being caught in brushes or squeegee.

If the machine is allowed to stand in neutral with the scrub deck down for more than 2 seconds, the solutions flow stops and brush motors stop. If either forward or reverse travel is selected, the solution flow will continue in the same setting and the scrub brush motors will continue in their same setting once movement of machine begins. Overlap the brush path and avoid transporting over previously cleaned areas.

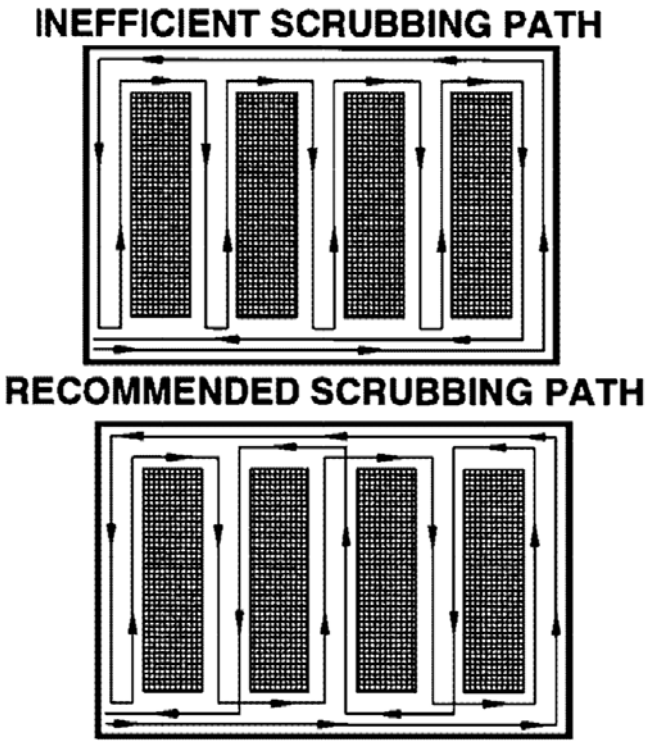

To Begin Scrubbing

When operating the machine around people, pay close attention for unexpected movement. Use extra caution around children.

Flammable liquids and/or reactive metals can cause explosions or fire! Do not pick up.

1. Stand on the operator platform. Throttle pedal must be in neutral position.
2. Turn machine power on.
3. Press the Drive Reset / Directional Control Switch, selecting the desired travel direction.
4. Position the function control knob to the desired operation. The brush motors will start, the scrub deck will lower, the solution will begin to flow, the squeegee will lower to the floor and the vacuum motors will start.
5. Drive machine forward to begin scrubbing.

NOTE: *Shut machine off immediately if water or foam is expelled from the machine.*

NOTE: *Solution flow is automatically shut off when brush motors stop. When brush motors are activated, flow automatically resumes.*

Priming Pump

If the solution system has gone dry or has been unused for a period of time, it may be necessary to follow the pump priming procedure.

1. Fill solution tank.
2. Loosen, but do not completely remove the strainer bowl. Solution should flow out of the strainer. If it does not, check the strainer screen inside the solution tank. Insure it is clear of debris. Tighten the strainer bowl.
3. Disconnect the squeegee hose from the recovery dome.
4. Begin normal scrubbing. Solution flow should begin within 2 minutes.
5. Connect squeegee hose to recovery dome.

To Stop Scrubbing

1. Rotate the function knob to either transport position. The brush motors will stop and the scrub deck will rise to the park position. After 10 seconds the squeegee will raise, and 10 seconds later the vacuum motor will turn off. This delay is to clear the vacuum hose of recovered solution.
2. Allow the throttle pedal to return to neutral.
3. Turn machine power off.

FOR SAFETY: Before leaving or servicing machine: stop on level surface, turn off machine and remove key.

Double Scrub

For floors which are heavily soiled or have thick accumulations of floor finish, may not clean sufficiently with one pass. In these cases it will be necessary to double scrub.

Rotate the knob to the double scrub position.

Make the first pass over the surface being cleaned with

the squeegee up, vacuum off and the solution on. For best results also remove the Aqua-mizer™, this will allow the solution to stay in contact with the soil while loosening the surface accumulation with the brushes. Allow time for the first application to stay in contact with the floor. Length of time between the first and second pass depends on amount of accumulation and the type of chemical being used. A second scrubbing with the function knob in one of the normal scrubbing modes will lower the squeegee and will keep the solution on and brushes down to further loosen soil. The additional application of solution will further assist the difficult cleaning job.

FOR SAFETY: When using machine, go slow on inclines and slippery services

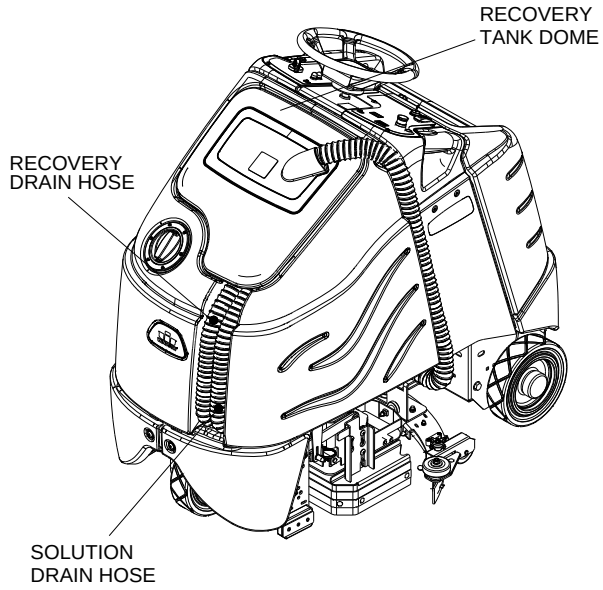

Emptying and Cleaning Tanks

1. Park the machine next to a floor drain. Drain hoses are at the front of the machine.
2. Turn the machine power off.

RECOVERY TANK

1. Remove the recovery tank dome. Pull the large drain hose from the mounting pocket. Unscrew cap, then lower hose in direction of the drain. Do not stand in front of end of hose. Recovered solution will come out with force.
2. Flush the recovery bag out with clean water. Do not use water hotter than 140°F (60°C) to clean tank. Damage may occur.
3. Clean debris from dome basket.
4. Clean off the float shut-off system and inspect for free movement of float. The float shut-off system is located in the rear of the recovery tank.
5. Replace the drain cap and secure drain hose under tank.Replace the drain cap and secure drain hose to front of tank.
6. If machine is to be stored, leave the recovery tank dome off, or propped open.

SOLUTION TANK

1. Remove the recovery tank dome.
2. Pull the solution drain hose from its mounting pocket. Unscrew the cap, then lower hose in direction of drain.
3. Remove the solution tank lid.
4. Flush the solution tank out with clean water and run several gallons of clean water through systems. Do not use water hotter than 140°F (60°C) to clean tank. Damage may occur.

NOTE: *Never allow solution to remain in tank. Damage to tank, seals and valves could occur.*

Service Schedule

MAINTENANCE	BEFORE EACH WORK PERIOD	AFTER EACH WORK PERIOD	50 HRS	100 HRS	200 HRS
Check water level of batteries after charging; add distilled water if necessary. (Wet cell only)	*				
Check that dome and cover seal tightly.	*				
Visually check for damaged or worn tires.	*				
Check brushes or pads for proper installation.	*				
Check vacuum hose connections.	*				
Check that squeegee is securely attached and properly adjusted.	*				
Check for securely attached drain hoses, plug and cap.	*				
Check pedal, brake and steering for proper operation.	*				
Clean out recovery tank and dome basket.		*			
Clean and inspect float shutoff.		*			
Clean out solution tank and filter, check flow.		*			
Clean and inspect solution filter strainer.		*			
Run vacuum motors to dry.		*			
Clean brushes or pads and check wear.		*			
Clean squeegee blades and check wear.		*			
Clean outside of tanks, check for damage.		*			
Store with dome off tank or propped open.		*			
Charge batteries if needed.		*			
Clean off top of batteries.			*		
Check battery cells with hydrometer. (Wet cell only)			*		
Inspect scrub deck skirts and Aqua-Mizers.			*		
Clean solution strainer inside tank.			*		
Check battery connections are tight.			*		
Clean battery cases and battery compartment.				*	
Check parking brake.					*
Clean cables and pulleys for squeegee lift.					*
Clean pivot points on squeegee and scrub deck.					*
Check all motors for carbon brush wear.					*
Check motor commutators.					*
Check steering chain tensioner.					*

Traction drive, wheels and batteries should be serviced based on traction drive hour meter (Deluxe). The scrub brush hour meter should be used for all other service schedule items.

Batteries

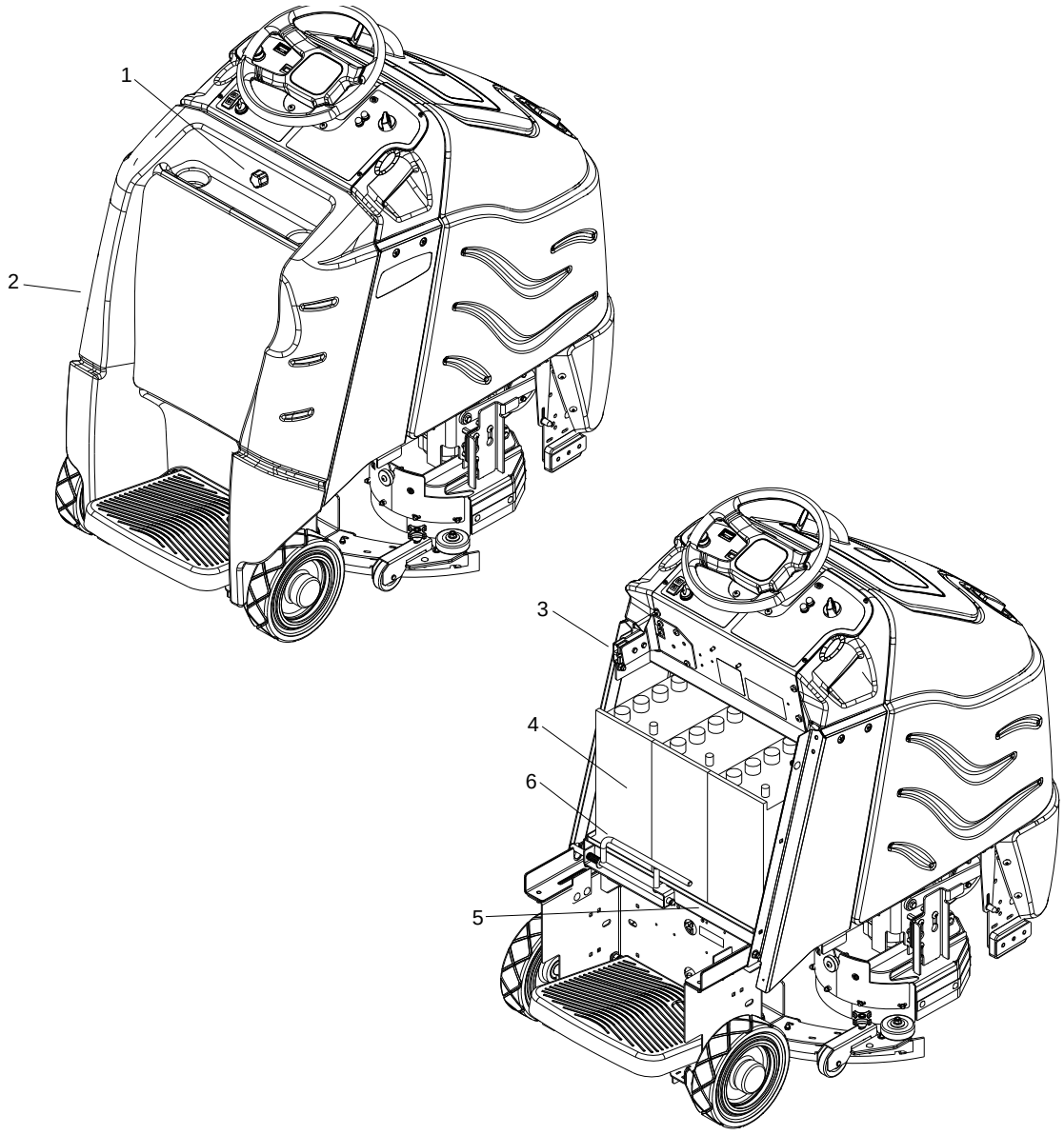

1. Rear Cover Retainer Knob
2. Rear Cover
3. Battery Connector-Machine
4. Batteries
5. Battery Tray
6. Battery Tray Liner

BATTERIES (WET CELL ONLY)

The batteries provide the power to operate the machine. The batteries require regular maintenance to keep them operating at peak efficiency.

The machine batteries will hold their charge for long periods of time, but they can only be charged a certain number of times. To get the greatest life from the batteries, charge them when their charge level reaches 25% of a full charge. Use a hydrometer to check the charge level.

Do not allow the batteries to remain in a discharged condition for any length of time. Never expose a discharged battery to temperatures below freezing. Discharged batteries will freeze causing cracked cases. Do not operate the machine if the batteries are in poor condition or if they have a charge level below 25% (specific gravity below 1.155).

Keep all metallic objects off the top of the batteries, as they may cause a short circuit. Replace worn or damaged cables and terminals.

Check the electrolyte level in each battery cell before and after charging the batteries. Never add acid to the batteries, use distilled water. Do not allow water level to fall below the battery plates. Portions of plates exposed to air will be destroyed. Do not overfill. Keep plugs firmly in place at all times.

⚠CAUTION:

When servicing machine, avoid contact with battery acid.

⚠WARNING:

Batteries emit hydrogen gas. Explosion or fire can result. Keep sparks and open flame away. Keep covers open when charging.

⚠WARNING:

Wear eye protection and protective clothing when working with batteries.

⚠WARNING:

Charge batteries in a well ventilated area.

BATTERY MAINTENANCE

1. When cleaning the batteries, use a solution of baking soda and water. Do not allow the cleaning fluid to enter the battery cells, electrolyte will be neutralized.
2. Maintain the proper electrolyte level in each battery cell. If a cell should accidentally overflow, clean immediately.
3. Wipe off the top of the batteries at least once a week.
4. Test battery condition with a hydrometer at least once a week.
5. Ensure that all connections are tight and all corrosion removed.
6. Every 4 to 6 months, remove that batteries from the machine and clean the battery cases and battery compartment.

CHECKING BATTERY SPECIFIC GRAVITY

Use a hydrometer to check the battery specific gravity.

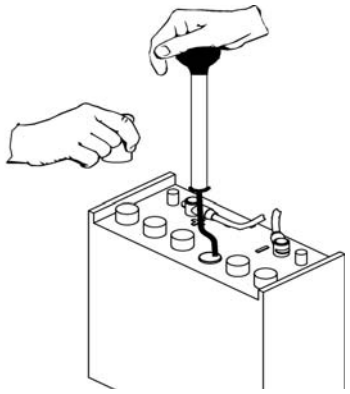

CHECKING GRAVITY

a. Hydrometer Battery
b. Battery

NOTE: Do not take readings immediately after adding distilled water, if the water and acid are not thoroughly mixed, the reading may not be accurate.

Check the hydrometer readings against this chart.

SPECIFIC GRAVITY @ 80°F (27°C)	***BATTERY CONDITION***
1.265	*100% CHARGED*
1.225	*75% CHARGED*
1.190	*50% CHARGED*
1.155	*25% CHARGED*
1.120	*DISCHARGED*

NOTE: *If the readings are taken when the battery electrolyte is any temperature other than 80°F (27°C), the reading must be temperature corrected.*

To find the corrected specific gravity reading when the temperature of the battery electrolyte is other than 80°F (27°C): Add (+) to the specific gravity reading 0.004 (4 points), for each 10°F (6°C) above 80° (27°C). Subtract (-) from the specific reading 0.004 (4 points), for each 10°F (6°C) below 80°F (27°C).

CHARGING BATTERIES

⚠CAUTION:

When servicing machine, avoid contact with battery acid.

⚠WARNING:

Batteries emit hydrogen gas. Explosion or fire can result. Keep sparks and open flame away. Keep covers open when charging.

⚠WARNING:

Wear eye protection and protective clothing when working with batteries.

⚠WARNING:

Charge batteries in a well ventilated area.

Use a 36 volt, 20 amp maximum output DC charger which will automatically shut off when the batteries are fully charged.

1. Stop the machine in a clean, well ventilated area next to the charger.
2. Turn “OFF” machine.

FOR SAFETY: Before leaving or servicing machine; stop on level surface, turn off machine and remove key.

3. Remove rear cover, unplug batteries from machine, unlatch battery tray and pull out to expose batteries.

⚠WARNING:

Batteries emit hydrogen gas. Explosion or fire can result. Keep sparks and open flame away. Keep covers open when charging.

4. Check the electrolyte level in each battery cell. Before charging, add just enough distilled water to cover the plates. After charging is complete, add just enough distilled water to bring up the level to the indicator ring. If the water level is too high before charging, normal expansion rate of the electrolyte may cause an overflow resulting in a loss of battery acid balance and damage the machine.

5. Replace the battery caps, and leave them in place while charging.
6. Unplug the battery connector from the machine.

FOR SAFETY: When charging, connect the charger to the batteries before connecting the charger to the AC wall outlet. Never connect the charger to the AC wall outlet first. Hazardous sparks may result.

7. Plug the charger connector into the battery connector. Connect the charger AC plug to a wall outlet. The charger gauge should indicate that the batteries are charging.
8. When the batteries are fully charged, disconnect the charger from the AC wall outlet, then disconnect the charger from the batteries.
9. Connect the batteries to the machine connector.
10. Check the electrolyte level. It should be up to the indicator ring. If necessary, add distilled water.
11. Install the rear cover.

CHANGING BATTERIES

Stop the machine in a clean area next to the charger. Turn off machine.

FOR SAFETY: Before leaving or servicing the machine; stop on level surface, turn off machine and remove key.

1. Remove the rear cover.
2. Disconnect battery pack from machine.
3. Unlatch battery tray from machine and pull out to expose batteries.
4. Use the proper size open end wrench to disconnect main ground wire first and secure cable terminal away from batteries.
5. Disconnect main positive lead and secure cable terminals away from batteries.
6. Loosen both terminals on each jumper cable and remove one at a time.
7. Prepare a suitable site to place the batteries.

⚠WARNING:

Attach suitable battery lifting device and lift batteries from the machine.Batteries are a potential environmental hazard. Consult your battery supplier for safe disposal methods.

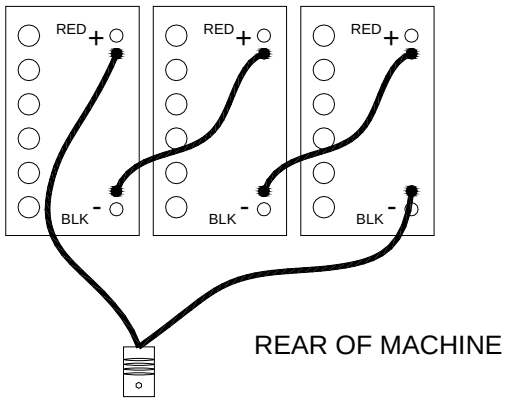

Squeegee

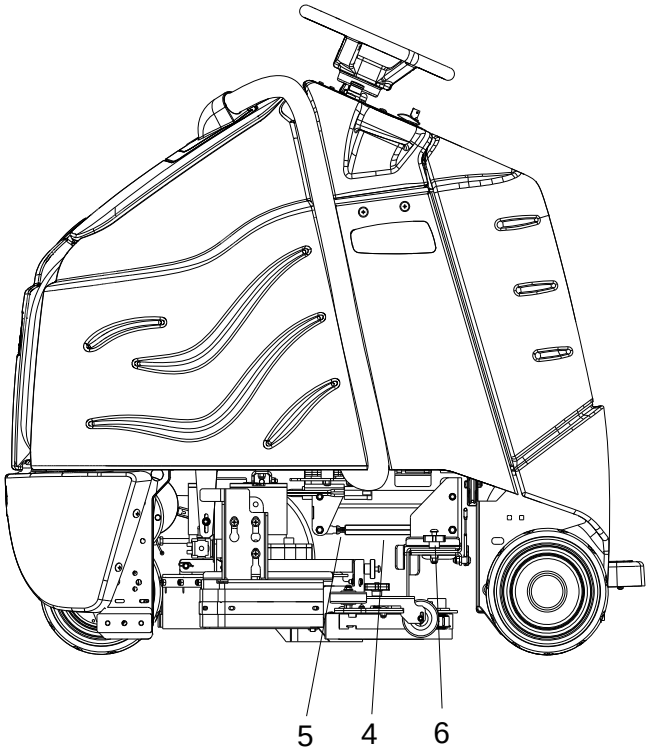

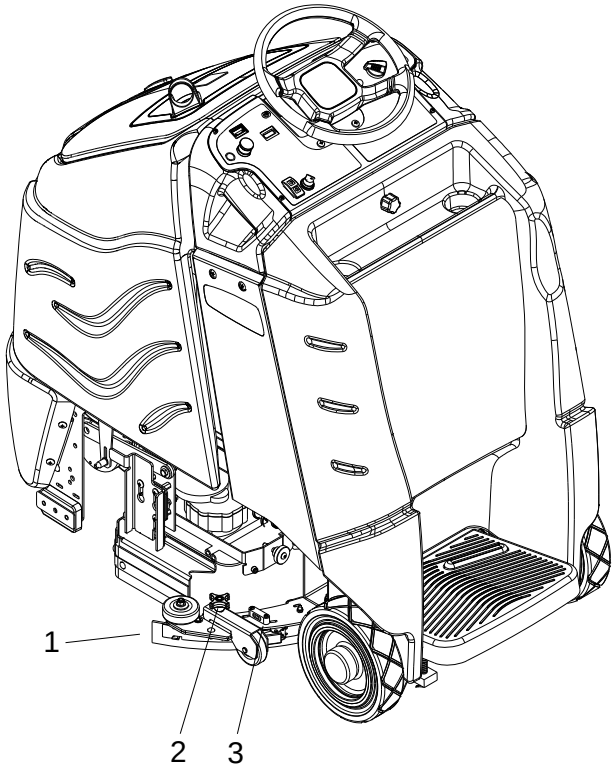

1. Squeegee
2. Squeegee Deflection Adjustment Knobs
3. Squeegee Level Indicator
4. Squeegee Pitch Adjustment Rod
5. Squeegee Pitch Adjustment Lock Nut
6. Squeegee Retainer Knob

Squeegee Blades

The front squeegee blade allows solution to pass through channels in the blade into the squeegee assembly while maintaining vacuum to provide lift. The front blade has four wear surfaces and can be rotated for extended life. The front blade should not require regular replacement under normal use.

The rear blade wipes the floor to a near dry condition. It is important the rear blade be in good condition to properly do its job. As with the front, each squeegee blade assembly has four wear surfaces for extended service.

Check both the front and rear squeegee blades for damage, wear, and adjustment each day in the pre-run check. Change the front blade if it is torn or has an uneven edge. Change the rear blade if it is less than 1/2 the original thickness.

Adjusting Squeegee

Adjusting the squeegee is a two-part process. First, the squeegee assembly must have correct pitch in order for the squeegee blade to have the same deflection at each tip as well as the center. The rod on the squeegee linkage controls the pitch adjustment. The second adjustment is the deflection. Knobs on each end of the squeegee control this.

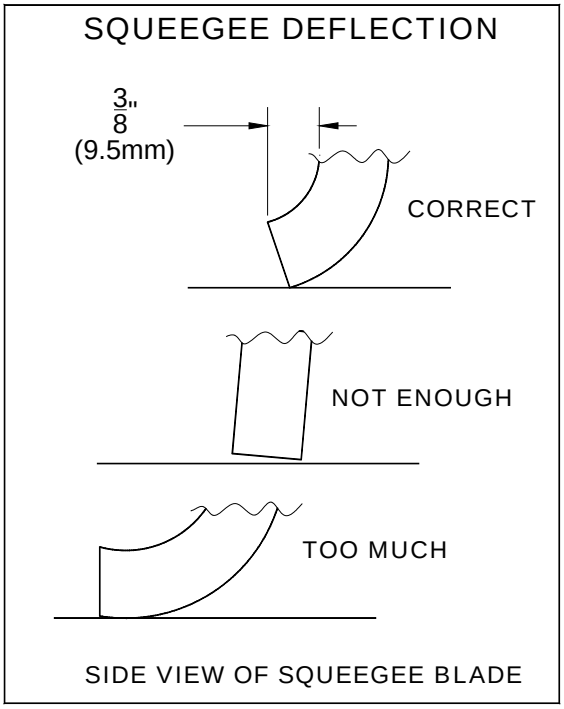

To Remove Squeegee Assembly

1. With the squeegee in the up position, turn key switch "OFF".
2. Disconnect vacuum hose from squeegee and loosen knob on left side of squeegee lifting carrier.
3. Pull squeegee assembly from the lifting carrier.
4. Inspect or repair as necessary and reinstall.

To Replace or Rotate Squeegee Blades

1. With the squeegee in the up position, turn key switch "OFF".

FOR SAFETY: Before leaving or servicing machine; stop on level surface, turn off machine and remove key.

2. Remove the squeegee assembly from the machine. Unlatch and remove blade retainer strap and remove squeegee blade.
3. Rotate the squeegee to new edge position or replace as required. Each blade has four new edge positions.
4. Install blade on locating pins of squeegee assembly.
5. Install squeegee retainer strap.
6. Fasten and lock latch, adjust latch only tight enough to take up slack in retaining strap.

To Replace or Rotate Front Squeegee Blades

1. With the squeegee in the up position, turn key switch "OFF".
2. Remove the squeegee from the machine. Loosen thumbscrews and remove the retainer strap and squeegee blade.
3. Rotate the squeegee to new edge position or replace as required. Each blade has four new edge positions. When installing the front blade, tighten the center thumbscrew first. Insure that the retainer strap is pressed against the blade before tightening the outer screws.

To Adjust Squeegee Pitch

1. Choose a smooth, level surface. Turn "ON" the key switch. Lower the squeegee and drive forward at least 2 feet (60cm.).
2. With the squeegee down, stop the machine. Do not allow machine to roll back.
3. FOR SAFETY: Before leaving or servicing the machine; stop on level surface, turn off machine and remove key.
4. Determine the differences, if any, in deflection of the squeegee blade between each end and the middle. Proper adjustment is obtained when deflection is equal all the way across the squeegee blade. The bubble level should also indicate when the squeegee is adjusted properly. When the air bubble is in the center of the vial, the deflection should be even across the squeegee blade.
5. To decrease the deflection of the squeegee blade at the ends, loosen wing nut and rotate the rod clockwise. To increase the deflection at the ends of the squeegee assembly, rotate the rod counter-clockwise knob.
6. Check the deflection of the squeegee blades again. Repeat steps 1 through 4 until the deflection is equal across the entire rear squeegee blade. Tighten wing nut.

To Adjust Amount of Rear Squeegee Deflection

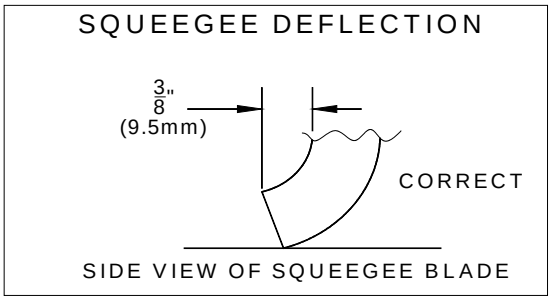

1. Choose a smooth, level surface. Lower the squeegee and drive forward at least 2 feet (60cm).
2. With the squeegee down, stop the machine. Do not allow machine to roll back.

FOR SAFETY: Before leaving or servicing machine; stop on level surface, turn off machine and remove key.

3. Observe the amount of squeegee deflection. It should deflect 3/8 in. (9.5mm) across the entire width of the squeegee.
4. To increase the squeegee deflection, turn the 2 knobs at the squeegee ends counter-clockwise. To decrease the deflection, turn the knobs clockwise.

   NOTE: *The deflection should be consistent along the length of the squeegee. If the deflection varies from end to end the knobs can be adjusted independently to correct the variation.*

5. Turn on the key switch. Raise, then lower squeegee assembly. Drive forward at least 2 feet (60cm).
6. Repeat steps 2 through 4 until deflection of3/8 in. (9.5mm) is reached.

Scrub Brushes

There are four different types of brushes available to cover applications from cleaning heavily soiled floors to polishing. A pad driver is also available to take advantage of the many cleaning pads on the market. Please refer to the following to assist in selecting the proper brush or pad for the work at hand.

Uncoated Floors

Aggressive Grit is a nylon fiber impregnated with silicone carbide grit. It grinds away stain, soil, and removes surface material.

Mild Grit is a less aggressive silicone carbide grit suitable for cleaning medium soil conditions. Advantages are faster ground speed than nylon bristles on light solid applications.

Polypropylene is a general-purpose scrub brush with stiff bristles. Polypropylene works well for maintaining concrete, wood and tile floors.

Finished Floors

Nylon bristles are used in a variety of applications on coated or uncoated surfaces.

White Pads (Polishing) are used for dry polishing to achieve a high-gloss appearance, or surface washing on highly polished or burnished floors.

Red Pads (Buffing) are used for light-duty scrubbing. When used with a mild detergent they will provide surface cleaning without removing the finish.

Blue Pads (Scrubbing) are used for heavy-duty scrubbing and light stripping. The blue pads remove less finish than brown stripping pads, yet will remove black marks, stains and dirt.

Black Pads (Stripping) are used for easy and complete removal of old floor waxes/finishes. They will quickly remove ground in dirt, black heel marks, and spills. When used with the proper stripper, this pad leaves the floor clean and ready for finishing.

The scrub brushes should be checked before each days work for wire, string, wear and damage.

Scrub Deck

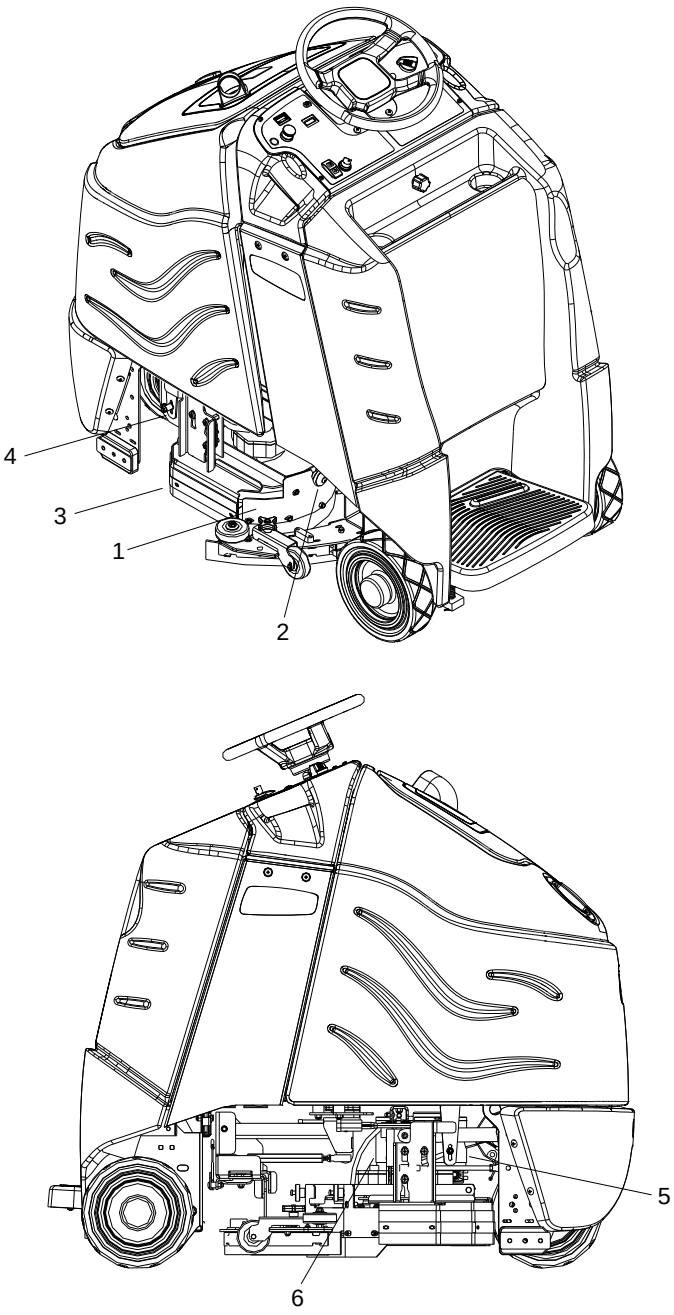

1. Scrub deck Aqua-Mizer™
2. Aqua-Mizer™ retainer knob
3. Scrub deck skirt
4. Scrub deck skirt stop
5. Scrub brush motor
6. Scrub deck lift actuator

⚠WARNING:

Do not use a pressure washer to clean around the brush motors. Use tap pressure only.

To Replace Scrub Brush Motors

With the scrub deck in the raised position, disconnect brush motor wiring connector from harness.

Remove skirts from scrub deck to access and remove scrub brushes or pad drivers.

1. Remove Aqua-Mizers™ from scrub deck.
2. Remove retaining bolt, lock washer, flat washer and star drive from brush motor shaft.
3. Remove 4 brush motor mounting bolts located under scrub deck.
4. Lower scrub deck.
5. Remove brush motor.
6. Reverse steps to install.

Brush Motor Carbon Brush Replacement

1. Scribe alignment mark on motor barrel to motor cap. Remove two bolts.
2. Remove end cap from motor.

   NOTE: *Motors contain two wave washers in cap. Do not lose these.*

3. Release brush from spring tension. Remove screw connecting brush wire lead to brush holder. Clean brush holder to insure free movement.
4. Retract spring and install new brush. Install connector screw and lead.
5. When all new brushes are installed. Place all in retracted position, held into brush holder by spring tension.
6. Carefully place end cap onto bearing on motor shaft.

   NOTE: *Use care to assure wave washer alignment.*

7. With end cap in partially installed position, release all brushes to contact position with motor commutator.

   NOTE: *Failure to insure all brushes are released will result in motor failure.*

8. Reset end cap and realign with scribe marks on motor barrel. Reinstall the two attach bolts from cap into base.
9. Maintain alignment between motor barrel base and cap.

Actuator Scrub Deck Removal / Replacement

FOR SAFETY: Before leaving or servicing machine, stop on a level surface. Turn off machine.

1. Remove the two screws that secure actuator spring plate and pull actuator barrel from stud on actuator spring bracket.
2. Remove clevis pin from upper bracket of actuator.
3. Disconnect actuator from wiring harness.
4. Reverse steps to install.

Scrub Deck Actuator Adjustment

The actuator will need to be adjusted when replaced.

To adjust the actuator:

1. While holding actuator barrel to prevent it from spinning, apply power to the actuator such that it is fully extended. Positive power to white wire, and negative/ground to black. Limit switch within actuator will stop it.
2. Turn barrel out one or more full turns to assure that when it is retracted it will not bind against itself.
3. While holding actuator barrel to prevent it from spinning, apply power to the actuator such that it is fully retracted. Positive power to black wire, and negative/ground to white wire. Limit switch within actuator will stop it.
4. With actuator fully retracted, turn barrel in until it touches the base of the threaded shaft.
5. At the bottomed out position, turn the barrel outfull turn, then enough more to allow connection to lift linkage.
6. Connect actuator to lift linkage.
7. Check travel of actuator during operation.

Circuit Protection

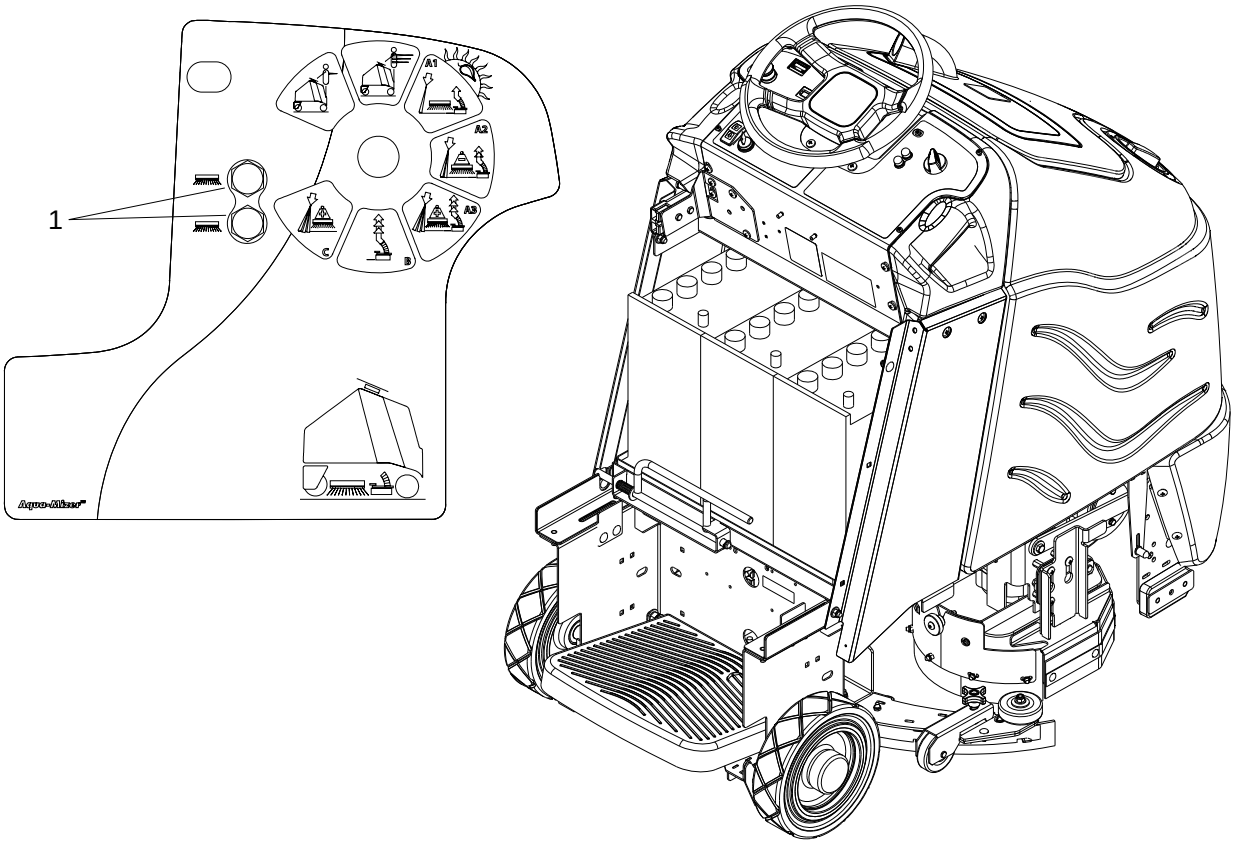

Circuit Breakers

1. Circuit breakers interrupt the flow of power in the event of an electrical overload. When a circuit breaker is tripped, reset it by pressing the exposed button. If a circuit breaker continues to trip, the cause of the electrical overload should be found and corrected.

18 Amp. (Disk) Protects the left scrub brush motor.

30 Amp. (Cylindrical) Protects the front scrub brush motor.

18 Amp. (Disk) Protects the right scrub brush motor.

30 Amp. (Cylindrical) Protects the rear scrub brush motor.

Solution Strainer & Pump-Disk

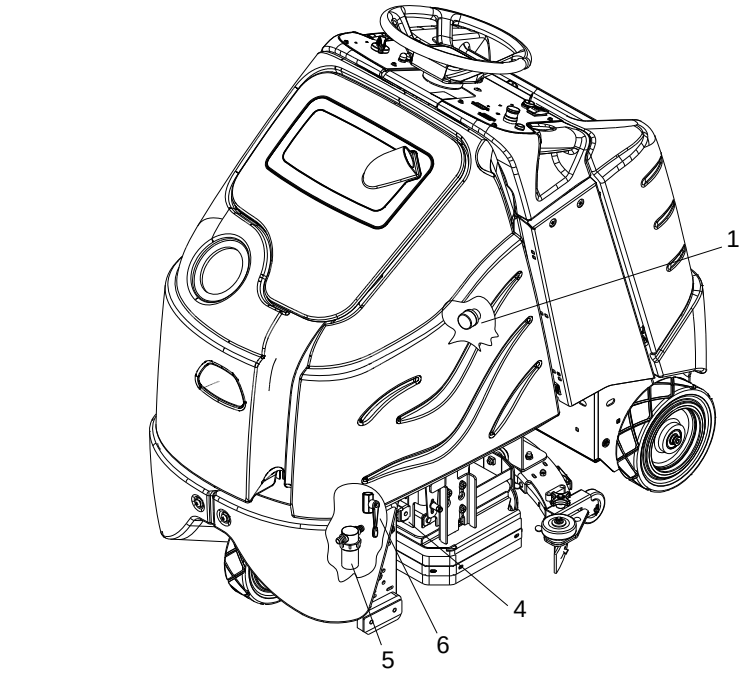

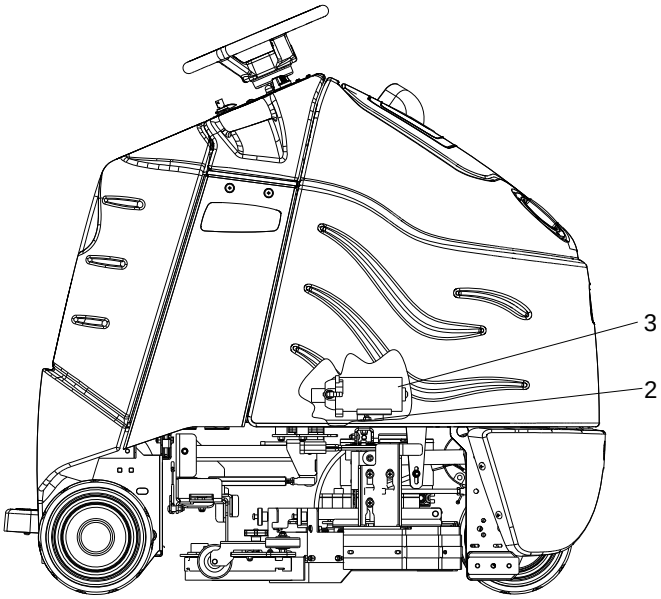

1. Solution Strainer-Coarse
2. Pump Mounting Plate
3. Pump
4. Solenoid Valve
5. Solution Strainer Fine
6. Shut-off Valve

Solution Strainer & Pump-Cylindrical

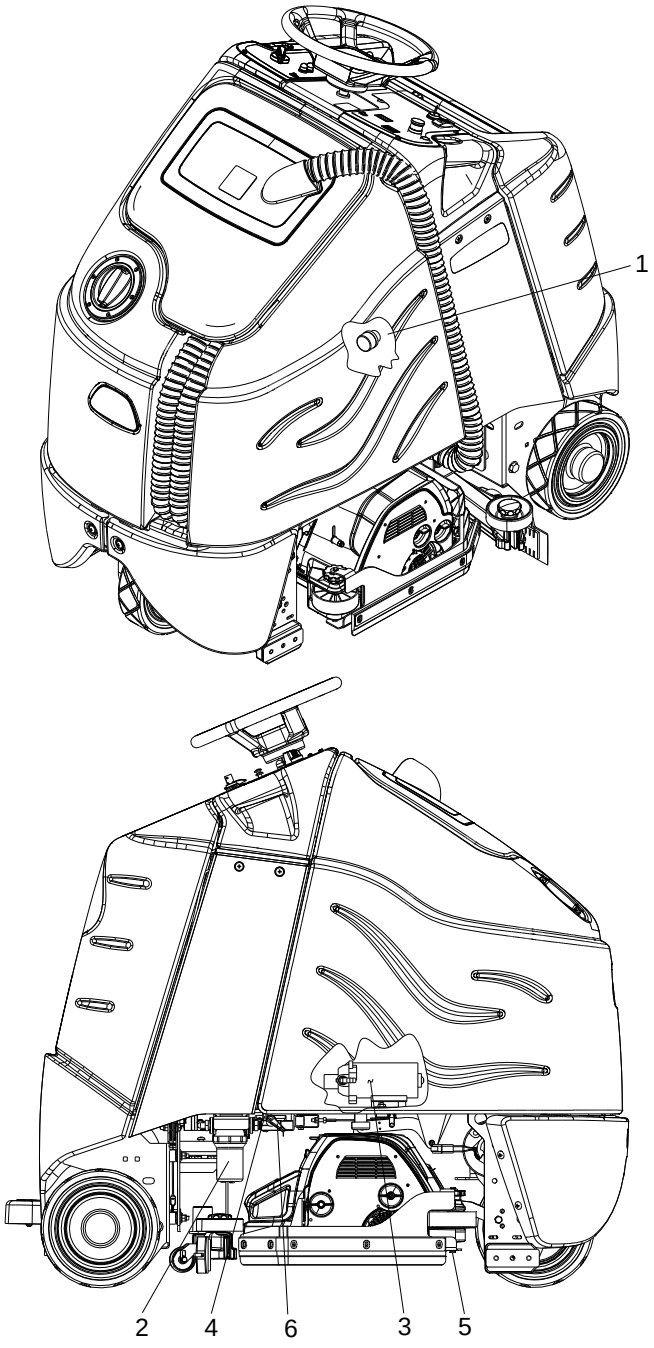

1. Solution Strainer-Coarse
2. Solution Strainer-Fine
3. Pump
4. Solenoid Valve
5. Spray or Drip Bar
6. Shut-off Valve

1. **SOLUTION STRAINER-COARSE**

Located in bottom of tank. The coarse strainer protects the finer strainer from large debris. If the fine strainer is clean and the pump and solenoid valve are not working, then check the coarse strainer for debris. Drain the solution tank and clean the coarse strainer. To remove the strainer, rotate the strainer counterclockwise. Cleanout the debris from wire mesh and reassemble.

2. **SOLUTION STRAINER (FINE) AND SHUT-OFF VALVE**

The fine strainer is located in front left corner of machine on disk models and in right rear corner of cylindrical models. The fine strainer protects the pump and solenoid valve from debris. If there is little or no solution flow to the ground, first check to make sue the shut-off valve is open. Next, check the strainer for debris. To remove the strainer, first turn the shut-off valve to the off position. Then, turn the bottom part of the strainer counterclockwise until the bottom is separated. Clean out the debris from the wire mesh and reassemble. Make sure the O-ring gasket is in place when re-assembled. To resume flow, turn the shut-off valve to the open position.

3. **PUMP**

The pump is located under the tank on the right side of machine. The pump delivers solution from the tank to the scrub deck.

To repair or replace pump:

1. Remove scrub deck skirts, Aqua-Mizer, and squeegee from machine.
2. Lower scrub deck to gain access to pump mounting plate.
3. Remove screw that secures pump mounting plate to frame.
4. The pump is located under the tank on the right side of machine. The pump delivers solution from the tank to the scrub deck. Pull pump mounting plate forward and down to expose pump.
5. Reverse steps to install.

4. **PUMP MOUNTING PLATE**

See graphic representation on previous page.

5. **SOLENOID VALVE**

The solenoid valve is mounted on the front of the scrub deck, on left side.

The solenoid valve shuts off solution flow to scrub deck whenever scrubbing stops. To repair or replace solenoid valve, cut cable ties that secure it to deck.

Vacuum & Float Shutoff

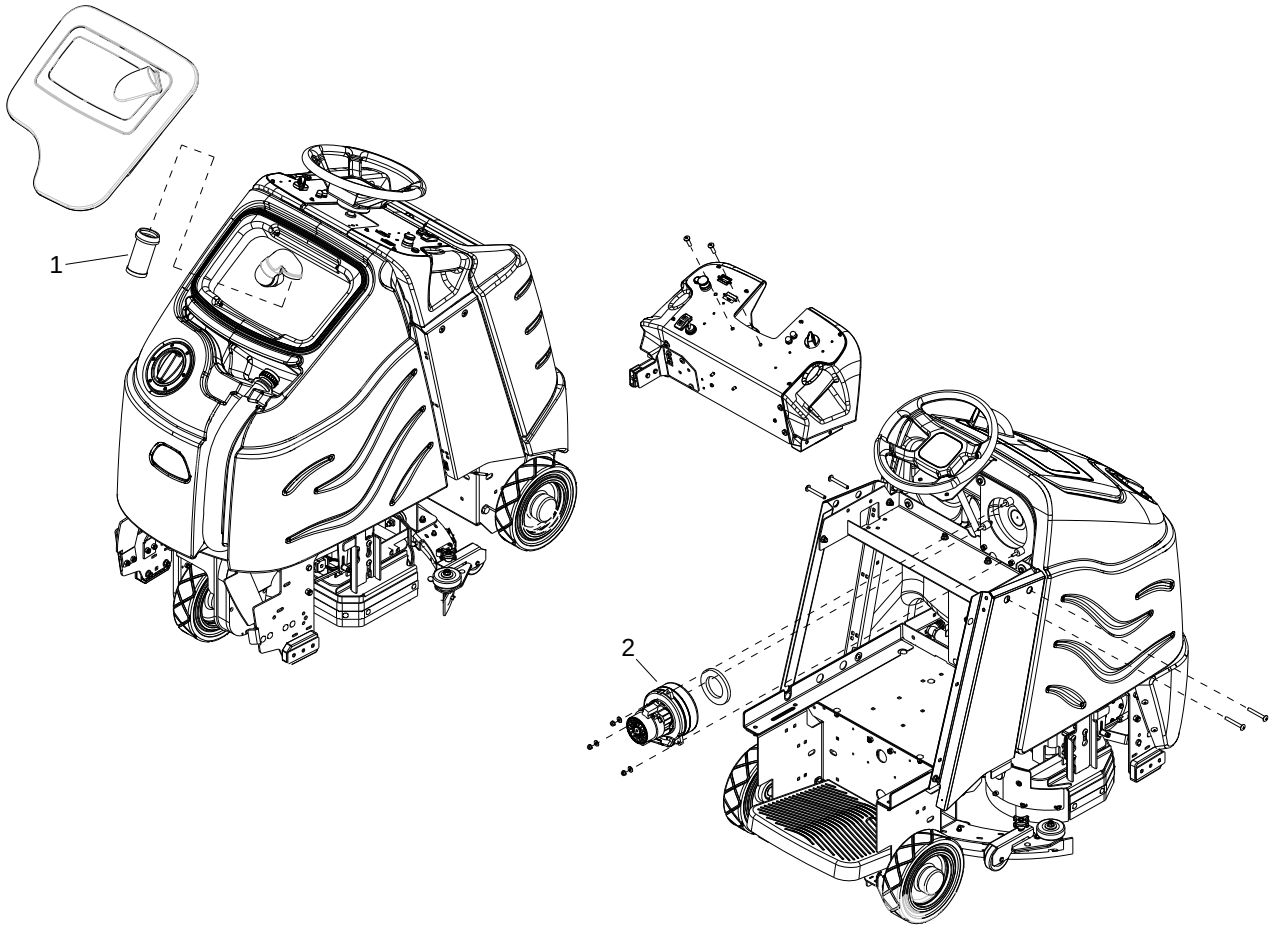

1. Recovery Tank Float Shut-off
2. Vacuum Motor

Recovery tank Float Shut-off

When water is no longer being vacuumed from the floor and the vacuum fan is operating, the ball float has engaged. The vacuum motor will not vacuum water with recovery tank full. The recovery tank must be drained.

1. The float shut-off screen can be cleaned in or out of the machine.
2. To clean the float shut-off while it is inside the machine wipe material off screen then rinse. Check that the ball is also clean and moves freely.
3. To remove the float shut-off, grasp the screen with one hand and the connected tube with the other. Tilt and pull the float screen assembly to pull it off the barb on the tube.
4. To install, place one hand on the tube, and then tilt and push the float screen assembly over the barb on the tube.

FOR SAFETY: **before leaving or servicing machine, stop on a level surface, turn off machine and disconnect power.**

To Repair or Replace Vacuum Motor

1. Remove rear cover from machine.
2. Remove two screws from top of control panel and four screws from sides of control housing.
3. Slide control housing back from tank to expose vacuum motor.
4. Disconnect electrical connector from the vacuum motor. Remove the muffler hose from the vacuum motor outlet.
5. Remove three nuts that secure vacuum motor.
6. Reverse steps to install. Make sure that gasket is on vacuum so that vacuum seals against tank.

Vacuum Motor Carbon Brushes

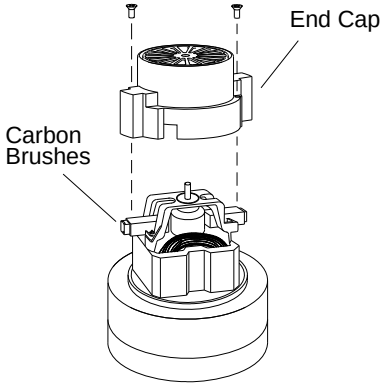

If armature commutator is grooved, extremely pitted or not concentric, the motor will need to be replaced or sent to a qualified service center.

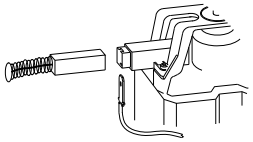

Important:
These brushes wear quicker as the length shortens due to increased heat. Spring inside brush housing will damage motor if brushes are allowed to wear away completely.

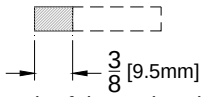

Periodically check the length of the carbon brushes. Replace both carbon brushes when either is less tan 3/8" (9.5mm) long.

Drive Motor

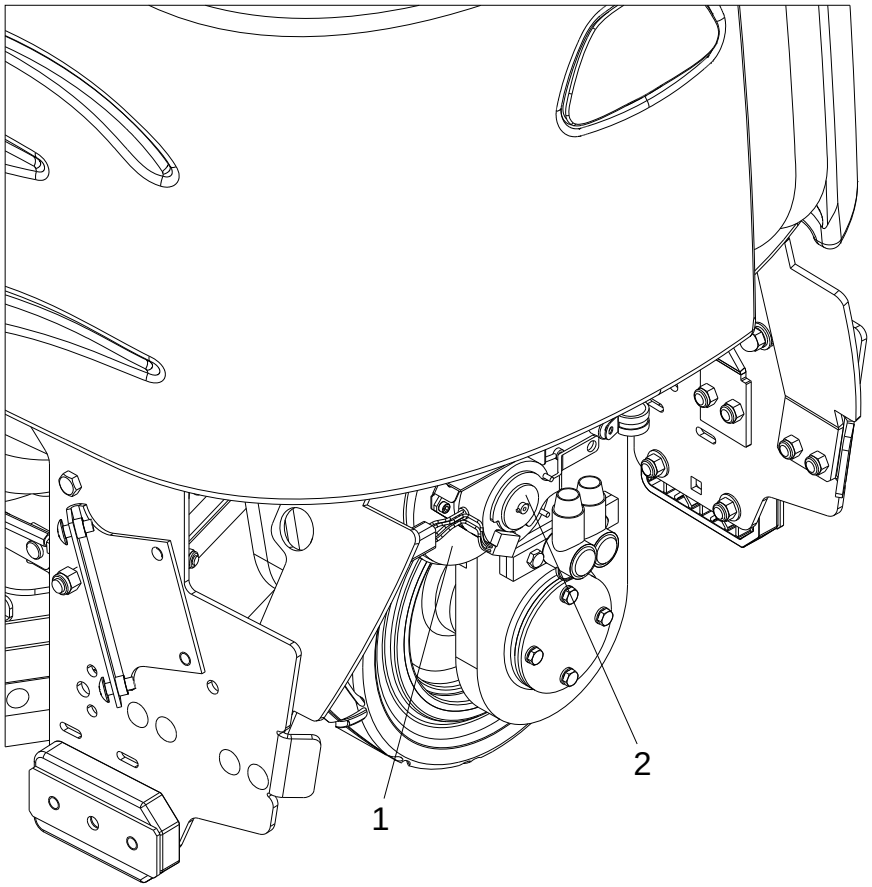

1. Drive Motor
2. Parking Brake

Electric Parking Brake Engagement

FOR SAFETY: Before leaving or servicing machine, stop on a level surface, turn off machine and remove key.

Electric Brake Engagement

This machine is equipped with an electric parking brake.

The brake automatically engages and keeps the machine from moving whenever the operator steps off the platform or when emergency stop is engaged.

The brake has a mechanical over-ride that can be engaged so machine can be pushed or towed (slowly).

When the mechanical over-ride is engaged the machine cannot be driven.

To engage brake:

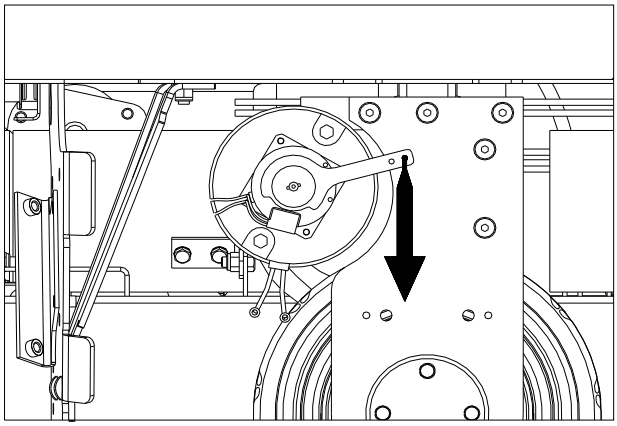

1. Mechanical over-ride engaged.Machine can be pushed or towed (slowly).
2. Push lever firmly in direction of arrow

NOTE: *There is an intermediate stop. Make sure lever is fully in the down position,*

To disengage brake:

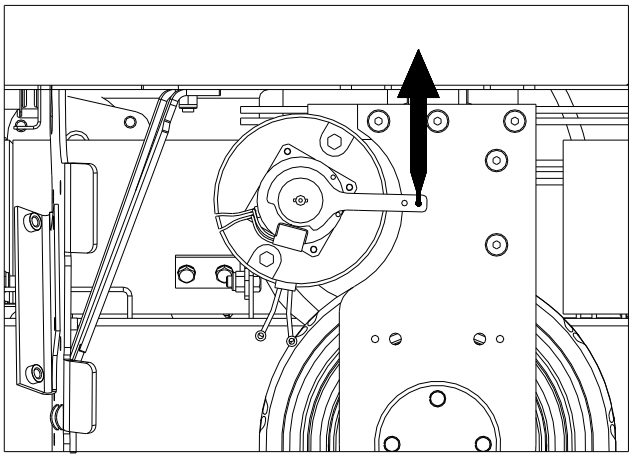

1. Mechanical over-ride disengaged. Machine can be driven.
2. Push lever firmly in direction of arrow.

Drive Motor Carbon Brush Replacement

⚠WARNING:

Do not use a pressure washer to clean around the motors. Use tap pressure only.

FOR SAFETY: Before leaving or servicing machine, stop on a level surface, turn off machine and remove key.

1. Disconnect batteries from machine.
2. Disconnect the electrical connection to the traction motor.

Brake Removal

(Must be done to access carbon brushes)

3. Remove 4 mounting screws and remove brake.
4. Drive roll pin out of the hex hub enough to allow hex hub to slide off shaft. It is recommended that the roll pin be left partially in the hex hub.
5. Remove brush cap.

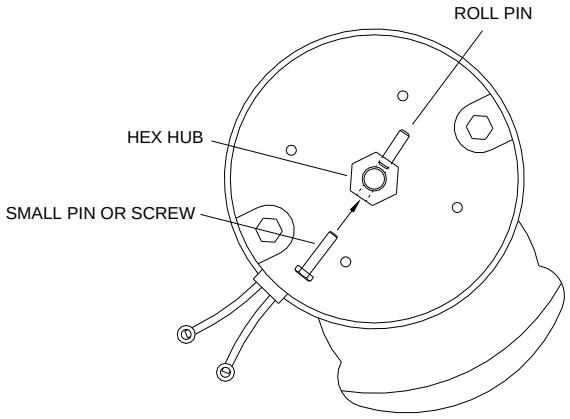

6. Release brush from spring tension. Remove screw connecting brush wire lead to brush holder. Clean brush holder to insure free movement.
7. Install new brush and reinstall connecting screw and lead.
8. When all new brushes are installed. Place all in retracted position, held into brush holder by spring tension.
9. Carefully replace brush cap.

Reinstalling:

10. When replacing the hex hub, use a small pin or screw to help align the holes.
11. Drive the pin into the hub and make sure it is flush to the hex surface. The brake will not fit on the hub if the roll pin is protruding from the hub.
12. Replace the hub and use Lock-Tite on the screws.

Removing or Replacing Bag

1. Disconnect batteries and make sure parking brake is not overridden.
2. Remove Dome and set aside.
3. Drain all solution from both sides of the bag and rinse well.
4. Remove float cage, loosen screw on elbow and remove elbow. (You can remove the bag by only removing the float cage and sliding the bag opening over the elbows.)
5. Remove threaded mandrel from the bottom of the bag. Turn counterclockwise, remove by grabbing the attached handle. The mandrel washer should come off with the mandrel.
6. Lift the bag assembly out of the tank. The dome gasket, plastic collar, and metal frame can all be removed as one assembly. The bag can be cleaned as an assembly or further disassembled.
7. To replace with a new bag remove the four screws that go through the collar and into the frame. Feed the frame through the loops at the top of the bag.
8. Re-assemble frame, collar and bag if they were disassembled.
9. Place bag assembly into tank.
10. Align bag drain hole with fitting in bottom of tank and thread in mandrel with washer attached. Turn clockwise to tighten. Tighten only by hand, do use a tool. Ensure mandrel is tight, the bag should be unable to move or spin around the mandrel.
11. Seat the collar, gasket, frame assembly to the tank rim opening. At the same time slide the vacuum collar opening over the float cage elbow assembly.
12. Replace the rest of the elbow and float cage assembly with its mounting screw, if it was removed.
13. Install dome and connect squeegee hose.

Transporting

Pushing Machine

The machine may be pushed for short distances at speeds not to exceed 5 mph. Be careful to avoid damaging machine. The machine may be pushed by hand from the rear.

NOTE: To avoid damage caused by regenerative voltage, disconnect traction motor before towing or pushing machine.

Machine Tie-Downs

There are two tie points located at front and each side of foot box frame and two at the front side of frame. Tie-down devices must be of the proper type and strength. The combined strength of all tie-downs must be strong enough to lift two times the weight of the machine. Tie-downs must be positioned to prevent the machine from moving forward, backward, or either side to side. Use all four corners of the machine with the tie-downs running out opposite directions. Tie-downs must be attached to the transporting vehicle securely.

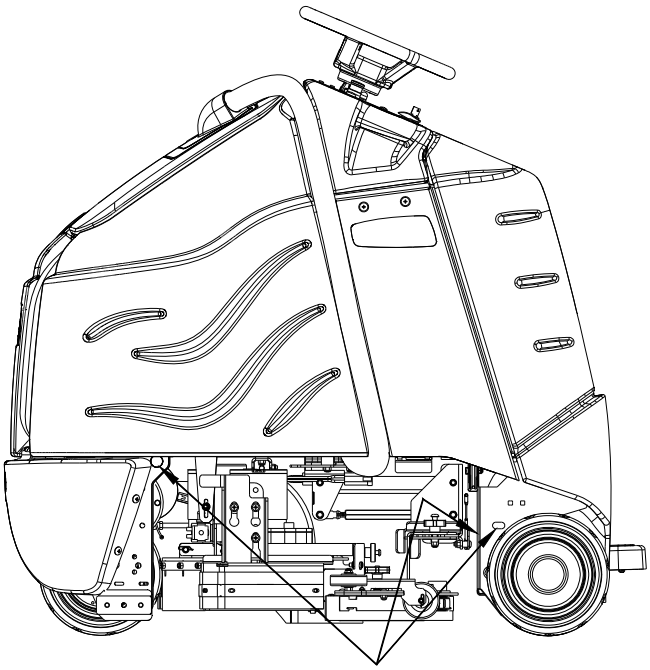

TIE DOWN POINTS

Preparation for Loading/Unloading Trailer

Before loading or unloading machine from trailer, remove squeegee, scrub deck, side skirts or side squeegees, Aqua-Mizers and scrub brushes (pads) to eliminate interference with tie-downs.

Scrub head must be in the up position before loading.

When transporting the machine on a trailer or in a truck, in addition to using tie-downs, be sure to set the parking brake, and block the tires to prevent the machine from rolling

Troubleshooting

PROBLEM	CAUSE	SOLUTION
No power to machine	Battery disconnected	Check all battery cable connections
	Emergency shut-off activated	Reset
	Battery cables corroded	Clean connections
	Faulty key switch	Replace switch
Little or no propel	Low battery charge	Charge batteries
	Machine turned on with pedal not in neutral position	Allow pedal to return to neutral. Restart.
	Tripped circuit breaker	Reset circuit breaker
	Wheels spin	Decrease brush pressure
	Controller overheated	Allow cool down period
	Loose motor connection	Check wires and connections from controller to motor
	Faulty throttle circuit or potentiometer	Check wires and connections from and potentiometer resistance
	Faulty drive reset circuit or switch	Check wires, connections and switch
	Faulty platform circuit or switch	Check wires, connections and switch
	Brake over-ride engaged	Disengage brake over-ride
	Faulty brake circuit or over-ride switch	Check wires, connections and switch
Machine does not change speeds	Faulty speed control circuit or switch	Check wires & connections
Forward speed only Reverse speed only	Faulty forward/reverse circuit	Check wires & connections
Poor or no water pickup	Squeegee out of adjustment	Adjust squeegee
	Debris caught on squeegee	Remove debris
	Worn squeegee blades	Rotate or replace squeegee blades
	Vacuum hose clogged	Clear obstruction from hose
	Vacuum hose disconnected from squeegee or recovery tank dome	Reconnect vacuum hose
	Recovery tank float system dirty	Clean float system
	Recovery tank not sealed	Place recovery tank dome on tank. Replace damaged gaskets
	Float-ball shut-off engaged Tank full	Empty recovery tank
	Foam filling recovery tank	Empty recovery tank. Use less or different detergent. Use defoamer.

PROBLEM	CAUSE	SOLUTION
Vacuum motor does not run, or runs slowly	Faulty vacuum circuit or switch	Check wires & connections
	Worn vacuum motor brushes	Replace brushes, check commutator
Squeegee will not go up/down	Faulty circuit or actuator	Check wires, connectors and actuator
	Faulty cables or pulleys	Repair/replace cables or pulleys
Poor scrubbing performance	Debris caught in scrub brushes	Remove debris
	Worn brushes or pads	Replace brushes or pads
	Improper detergent, brush or pad used	Contact equipment or application specialists
	Low scrub brush down pressure	Increase brush pressure
	Low battery charge	Charge batteries
Little or no solution flow to the floor	Solution tank empty	Fill solution tank
	Solution strainer plugged	Clean solution strainer
	Solution system plumbing obstructed	Clear obstruction from plumbiing
	Pump obstructed	Clean or replace pump
	Solution solenoid valve obstructed or stuck	Solution solenoid valve obstructed or stuck
	Solution shut-off valve is closed	Open shut-off valve
	Faulty pump circuit or pump	Check wiring, connections, and pump.
	Faulty solenoid	Check solenoid valve
Brush motors do not run, or run slowly	Circuit breaker(s) tripped	Reset circuit beaker(s)
	Low battery charge	Charge battery
	Faulty brush circuit or motor	Check wires, connections and motor
	Worn brush motor brushes	Replace brushes, check commutator
Scrub deck goes down, then raises	Faulty actuator circuit or actuator	Faulty actuator circuit or actuator
	No brushes or pad drivers on machine	Install brushes or pad drivers

Controller Fault Codes

ERROR CODE DELUXE	PROBLEM	SOLUTION
	LOW BATTERY VOLTAGE	THE BATTERY NEEDS CHARGING OR THERE IS A BAD CONNECTION TO THE BATTERY
	TRACTION MOTOR DISCONNECTED	THE TRACTION MOTOR HAS A BAD CONNECTION, CHECK CONNECTIONS TO MOTOR
	BRUSH MOTOR DISCONNECTED	THE BRUSH MOTOR HAS A BAD CONNECTION, CHECK CONNECTIONS TO MOTOR
	AUX FAULT	CHECK AUX OUTPUT DEVICES, CHECK ALL ASSOCIATED WIRING TO AUX DEVICES
	VACUUM MOTOR DISCONNECTED	THE VACUUM MOTOR HAS A BAD CONNECTION, CHECK CONNECT
	CONTROL SYSTEM INHIBITED	THE TRIO IS BEING INHIBITED FROM DRIVING, IE, ON-BOARD CHARGER IS IN USE
	THROTTLE TRIP ERROR	THE THROTTLE IS DEFLECTED OR ASSOCIATED WIRING HAS A BREAK OR SHORT CIRCUIT
	CONTROL SYSTEM TRIP	THE CONTROL SYSTEM IS IN ERROR, CHECK ALL CONNECTIONS TO CONTROLLER
	SOLENOID BRAKE	THE SOLENOID HAS A BAD CONNECTION , CHECK CONNECTION TO BRAKE
	HIGH BATTERY VOLTAGE	EXCESSIVE BATTERY VOLTAGE, CHECK FOR POOR BATTERY CONDITION

Notes:

Parts

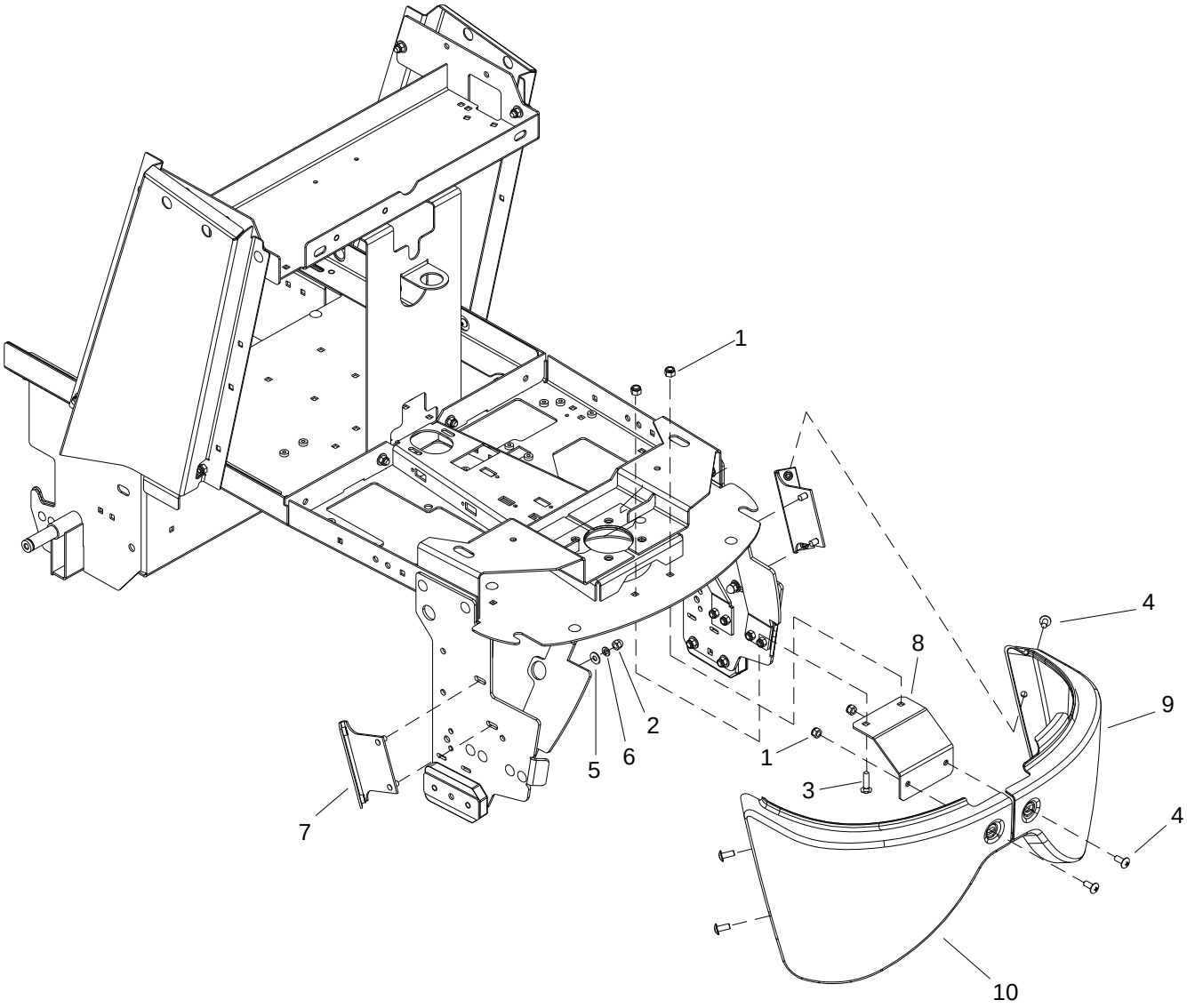
1
4
8
9
2
5
6
1
3
4
7
10

REF	PART NO.	PRV NO.	QTY	DESCRIPTION	SERIAL NO. FROM	NOTES
1	86270830	57023	4	NUT, 5/16-18 HEX NYLOCK SS		
2	86197040	57264	4	NUT, 5/16-18 HEX ACORN		
3	86276070	70593	2	SCR, 5/16-18 X 3/4 CARRIAGE SS		
4	86276890	70752	6	SCR, 5/16-18X3/4 PTHMS SS		
5	86010670	87029	4	WASHER, 5/16 X 3/4 SS		
6	86279130	87083	4	WASHER, 5/16 SPLIT LOCK PLTD		
7	86070730	140729	2	BRKT, BUMPER MOUNT, SIDE		
8	86315790	-	1	BRKT, BUMPER MTG		
9	86331120	-	1	BUMPER, LEFT, GREY		
10	86331110	-	1	BUMPER, RIGHT, GREY		

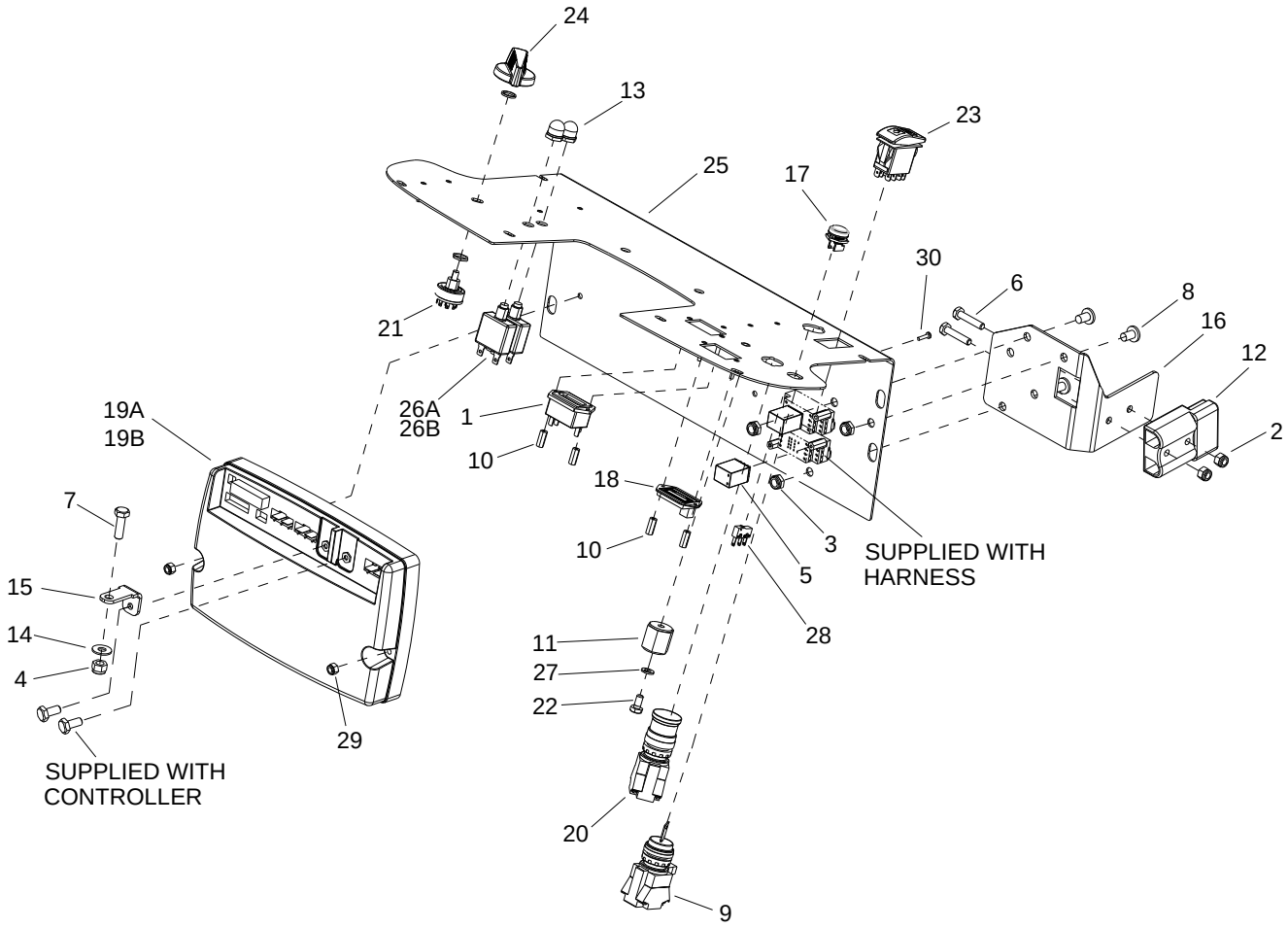
24
13
23
25
17
30
6
8
16
12
21
26A
26B
1
19A
19B
10
18
3
SUPPLIED WITH
HARNESS
2
7
10
5
15
28
14
11
27
4
22
29
SUPPLIED WITH
CONTROLLER
20
9

REF	PART NO.	PRV NO.	QTY	DESCRIPTION	SERIAL NO. FROM	NOTES
1	86315470		1	METER, HOUR ICD		
2	86005810	57245	2	NUT, 1/4-20 HEX NYLOCK SS		
3	86271840	57285	3	NUT, 5/16-18 HEX NYLOCK THN SS		
4	86271910	57295	1	NUT, 5/16-18 FLEXLOCK		
5	86313900	-	2	RELAY, 5A, 24V, 4PDT		
6	86273820	70019	2	SCR, 1/4-20 X 1.25 HHCS SS		
7	86275760	70540	1	SCR, 5/16-18 X 1.00 HHCS GR8		
8	86277480	70850	3	SCR, 5/16-18X1/2 PTHMS SS		
9	86007190	72161	1	SWITCH, KEY DPST		
10	86255900	73538	14	STANDOFF, 6-32 X 5/8 HEX NYL		
11	86255910	73659	1	STANDOFF, 1/4-20 X 1.0 HEX INS		
12	86008760	80682	1	CONNECTOR, BATTERY GRY, 175AMP		
13	86332510	-	2	BOOT, SEAL PUSH BUTTON 11MM		
14	86010670	87029	1	WASHER, 5/16 X 3/4 SS		
15	86068850	140219	1	BRKT, CABLE ATTACH		
16	86070720	140728	1	BRKT, BATT CONN BASIC		
17	86295200	-	1	ASM, BUTTON, BLACK, W/BEZEL		
18	86012670	-	1	METER, 36V BATTERY		
19A	86315400	-	1	CONTROLLER, 2-STAGE, GEAR DRIVE		DISK
19B	86318040	-	1	CONTROLLER, GEAR DRIVE CYL		CYLINDRICAL
20	86292590	-	1	SWITCH, E-STOP AKW CHARIOT		
21	86313820	-	1	SWITCH, ROTARY, 7 POSN		
22	86273830	70020	1	SCR, 1/4-20 X 1/2 HHCS SS NP		
23	86313950	-	1	SWITCH, SPDT 3 POSN MOM, ARROW		
24	86314150	-	1	KNOB, SELECTOR		
25	86315640	-	1	PANEL, CONTROL		
26A	86316160	-	2	BREAKER, 18A, 250VAC, 32 VDC		DISK
26B	86322490	-	2	BREAKER, 30A 250 VAC, 32 VDC		CYLINDRICAL
27	86010780	87162	1	WASHER, 1/4 SPLIT LOCK PLTD		
28	86292780	-	1	SWITCH, MICRO		
29	86270990	57090	2	NUT, 10-32 HEX NYLOCK SS		

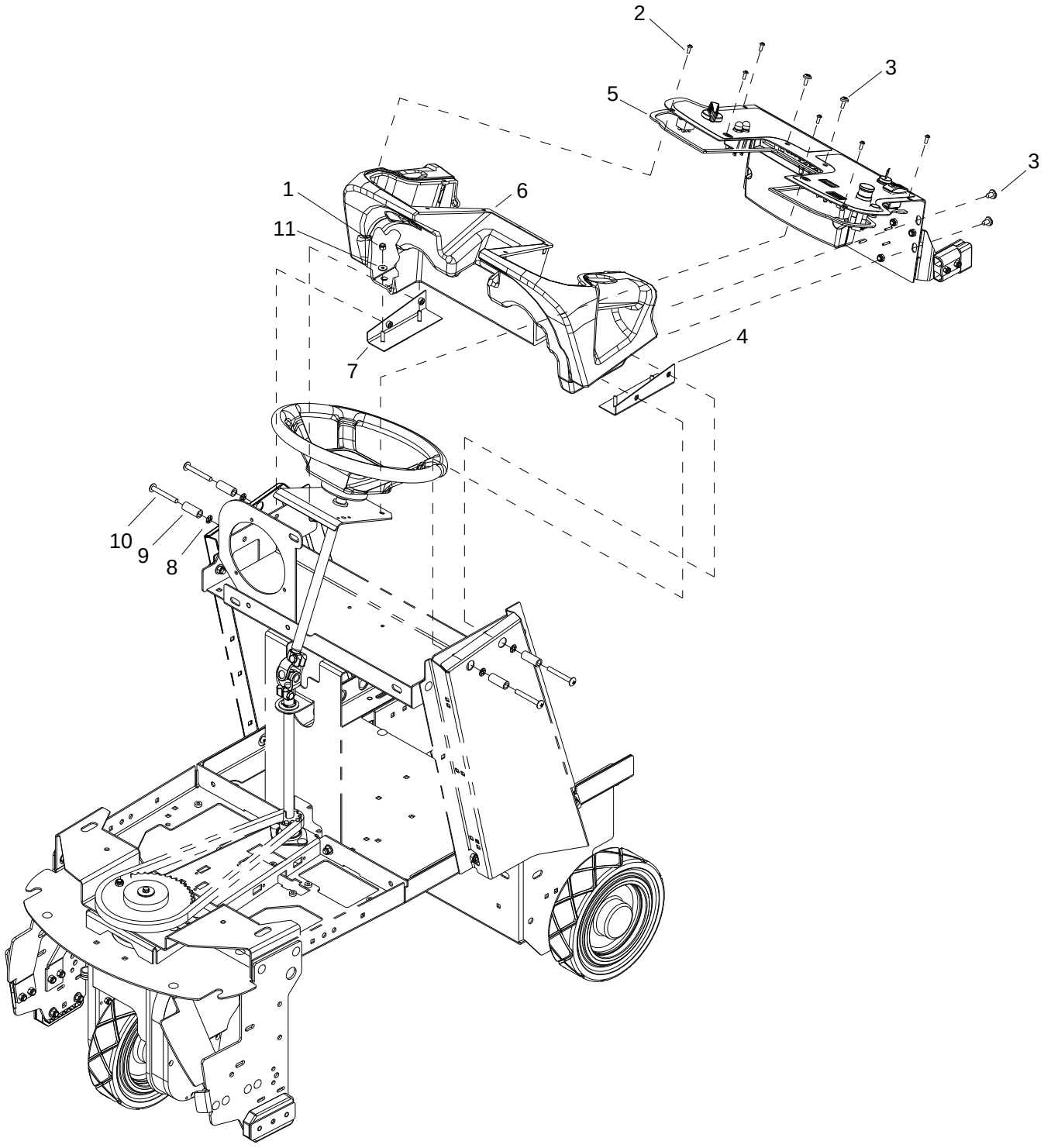
2
3
5
3
1
6
11
4
7
10
9
8

REF	PART NO.	PRV NO.	QTY	DESCRIPTION	SERIAL NO. FROM	NOTES
1	86005810	57245	4	NUT, 1/4-20 HEX NYLOCK SS		
2	86290540	-	6	SCR, 10-32 X 1/2 TORX SS BLK NP		
3	86277480	70850	6	SCR, 5/16-18 X1/2 PTHMS SS		
4	86317890	-	1	BRKT, LEFT CONSOLE MOUNT		
5	86237900	35278	3	GASKET, .125 X .25W X 23L		
6	86031730	270084	1	CONSOLE		
7	86317900	-	1	BRKT, RIGHT CONSOLE MOUNT		
8	86279750	87252	4	WASHER, RET, PUSHNUT, 5/16 BOLT		
9	86089650	78524	4	TUBE, 5/8 OD X .357 ID X 1.57		
10	86277420	70841	4	SCR, 5/16-18 X 2.5 PTHMS SS		
11	86010630	87013	4	WASHER, 1/4 ID X 5/8 OD SS		

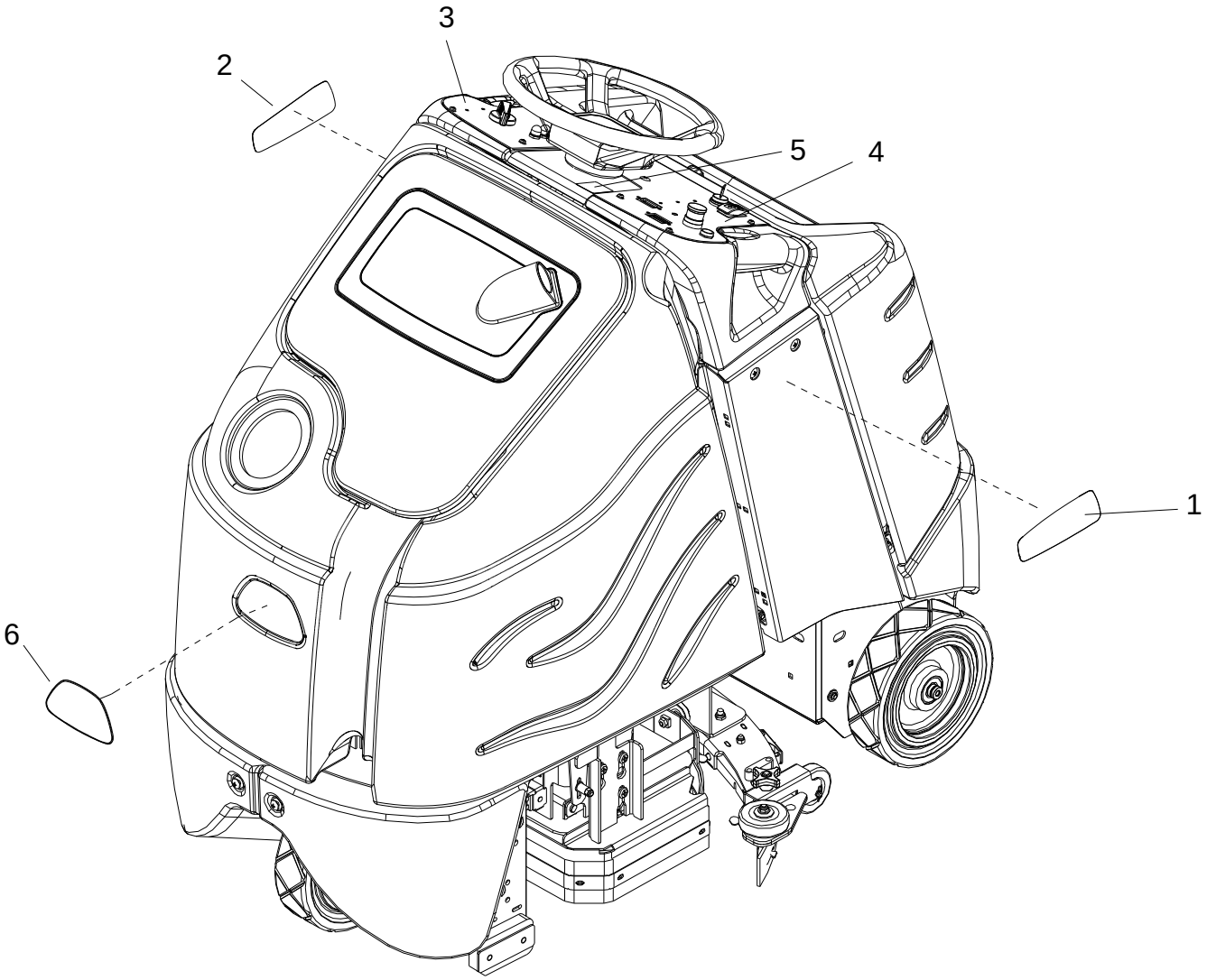
3
2
5
4
1
6

REF	PART NO.	PRV NO.	QTY	DESCRIPTION	SERIAL NO. FROM	NOTES:
1A	86318570	-	1	LABEL, CHAR, ISCURB 24, LEFT		
1B	86318590	-	1	LABEL, CHAR, ISCRUB 26C, LEFT		
2A	86318580	-	1	LABEL, CHAR, ISCRUB 24, RIGHT		
2B	86318600	-	1	LABEL, CHAR, ISCRUB 26C, RIGHT		
3	86317040	-	1	LABEL, PANEL, RIGHT		
4	86317030	-	1	LABEL, PANEL, LEFT		
5	86243990	500780	1	LABEL, COVER PANEL		
6	86004970	50990	1	LABEL, WINDSOR LOGO DOMED		

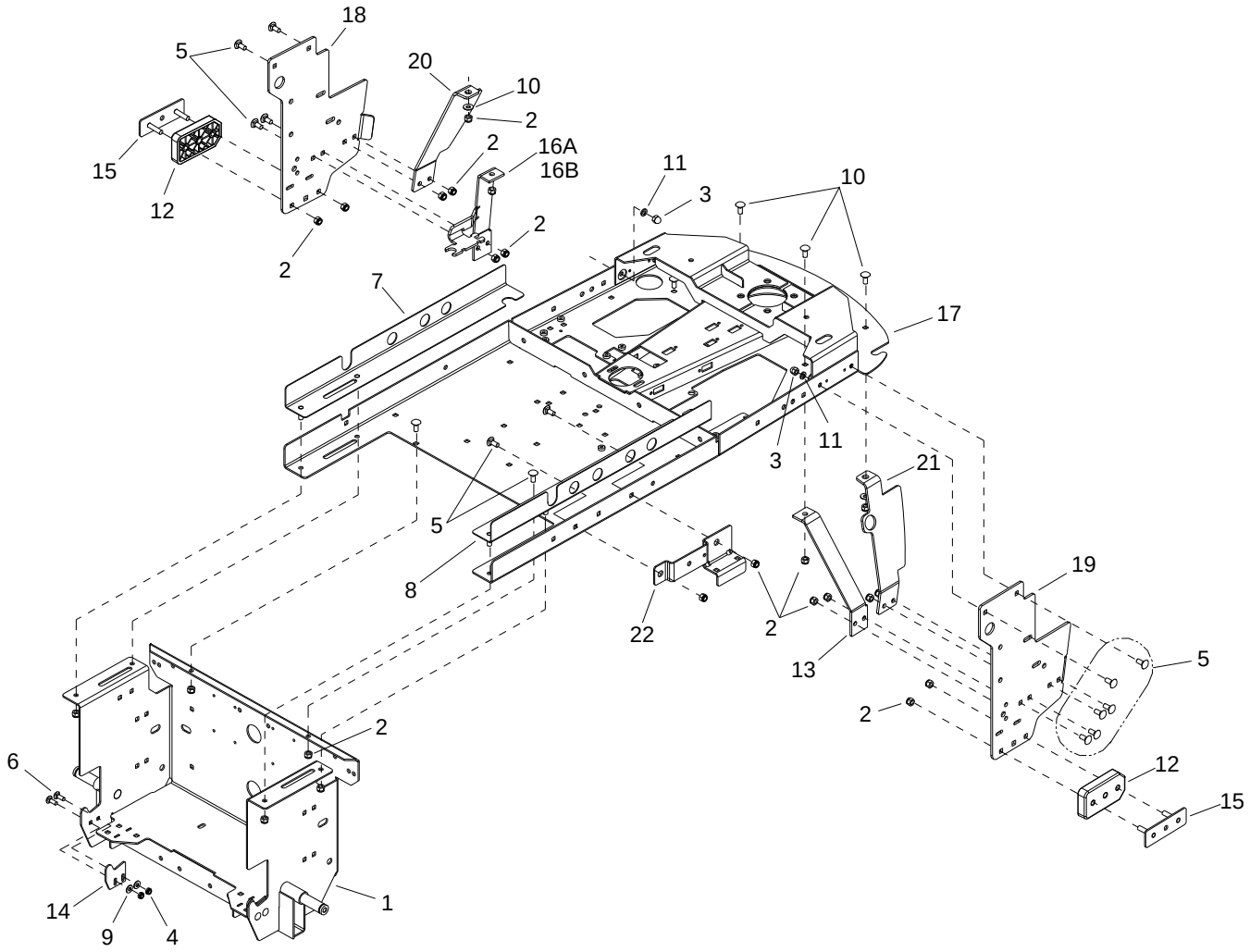
18
5
20
10
2
2
16A
16B
15
12
2
2
11
3
10
7
17
3
11
21
5
8
19
22
2
13
5
2
2
6
12
15
14
9
4
1

REF	PART NO.	PRV NO.	QTY	DESCRIPTION	SERIAL NO. FROM	NOTES
1	86091420	05251	1	AXLE, REAR, WELDMENT		
2	86270830	57023	24	NUT, 5/16-18 HEX NYLOCK SS		
3	86197040	57264	4	NUT, 5/16-18 HEX ACORN		
4	86271870	57290	4	NUT, 1/4-20 HEX NYLOCK THIN SS		
5	86276070	70593	20	SCR, 5/16-18 X 3/4 CARRIAGE SS		
6	86276950	70772	4	SCR, 1/4-20 X 3/4 CARRIAGE SS		
7	86088750	75457	1	TRAY, SLIDE, RIGHT		
8	86088760	75458	1	TRAY, SLIDE, LEFT		
9	86010630	87013	4	WASHER, 1/4 X 5/8 FLAT SS		
10	86010670	87029	6	WASHER, 5/16 X 3/4 SS		
11	86279130	87083	4	WASHER, 5/16 SPLIT		
12	86064300	140790	2	PAD, TIPPING BAR		
13	86071120	140811	1	BRKT, BRACE, RIGHT REAR		
14	86079290	620097	2	PLATE, REAR COVER ADJ.		
15	86079320	620101	2	PLATE, PAD RETAINER		
16A	86303720	-	1	BRKT, BRACE, LT. REAR SOL.		DISK
16B	86071130	140812	1	BRKT BRACE, LT REAR		CYLINDRICAL
17	86314900	-	1	FRAME, MAIN		
18	86314960	-	1	BRKT, LINKAGE, LEFT		
19	86314970	-	1	BRKT, LINKAGE, RIGHT		
20	86314980	-	1	BRKT, BRACE, LEFT FRONT		
21	86314990	-	1	BRKT, BRACE, RIGHT FRONT		
22	86315210	-	1	BRKT, STRAINER		

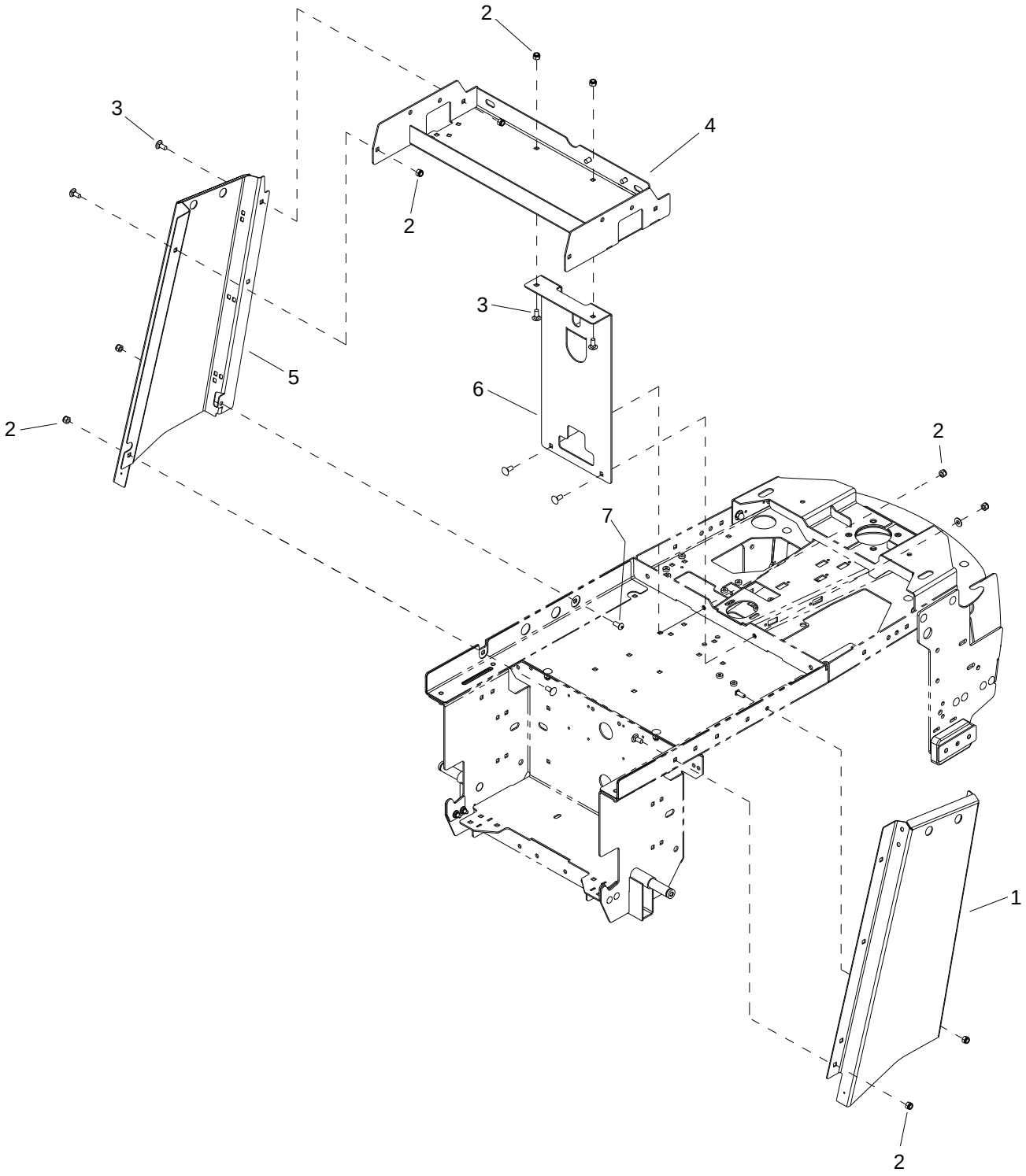
2
3
4
2
3
5
6
2
2
7
1
2

REF	PART NO.	PRV NO.	QTY	DESCRIPTION	SERIAL NO. FROM	NOTES:
1	86074160	270101	1	BRKT, SIDE CHANNEL R		
2	86270830	57023	10	NUT, 5-16-18 HEX NYLOCK SS		
3	86276070	70593	12	SCR, 5-16-18 X 3/4 CARRIAGE SS		
4	86314760	-	1	TRAY, CABLE		
5	86073500	270090	1	BRKT, SIDE CHANNEL L		
6	86314770	-	2	BRKT, STEERING SUPPORT		
7	86277460	70847	1	SCR, 5/16-18 X 5/8 BSHCS SS		

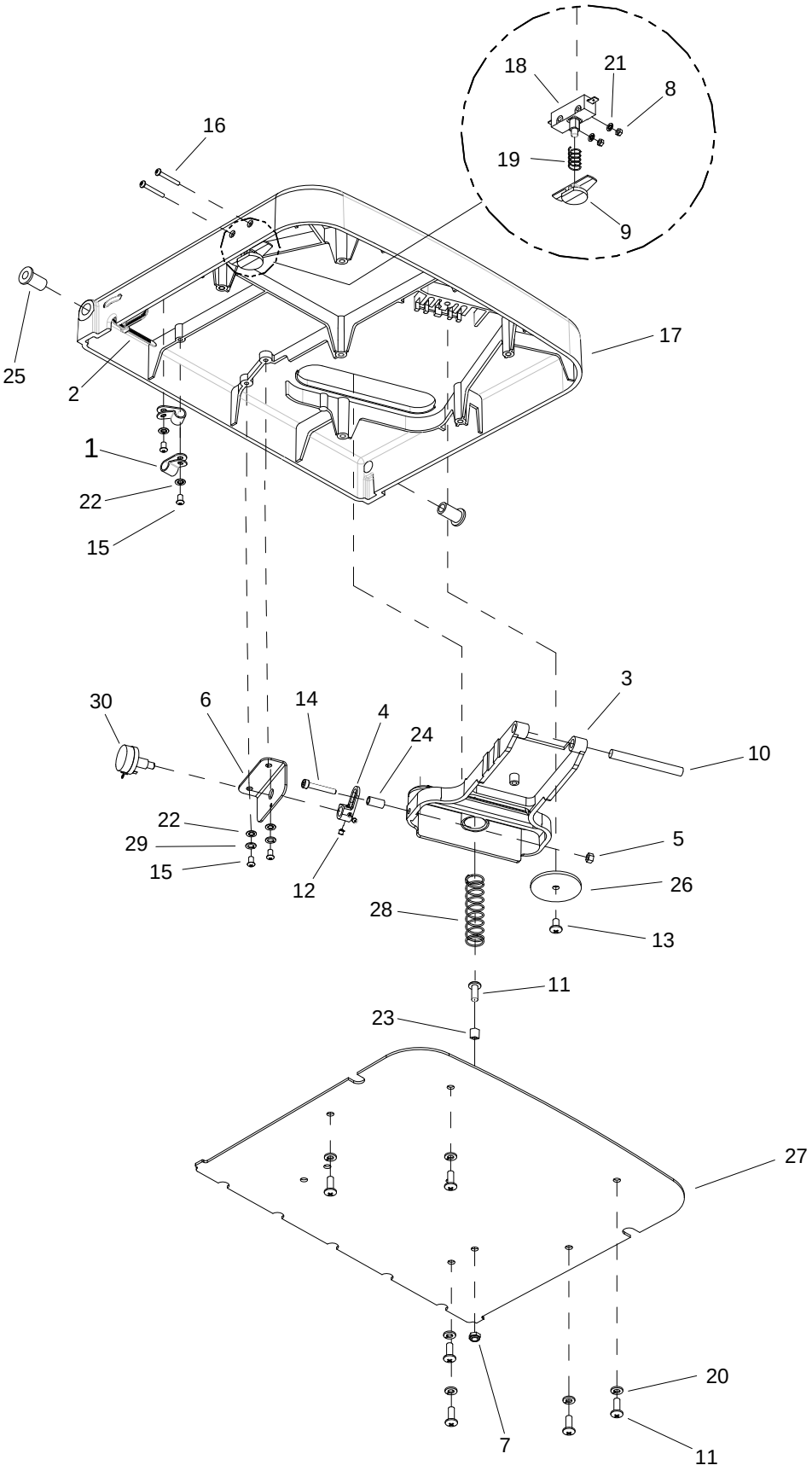
18
21
8
19
9
16
25
2
17
1
22
15
30
6
14
4
24
3
10
22
29
15
12
5
26
28
13
11
23
27
20
7
11

REF	PART NO.	PRV NO.	QTY	DESCRIPTION	SERIAL NO. FROM	NOTES
1	86233170	20054	2	CLAMP, 3/8 NYLON UL/CSA		
2	86264920	27049	1	CABLE TIE, .19 X 7 UL/CSA		
3	86222510	34430	1	PEDAL, THROTTLE		
4	86221850	34433	1	LINK, THROTTLE		
5	86136310	57086	1	NUT, M5 HEX		
6	86312820	-	1	BRACKET, POT, SPEED		
7	86288720	57277	1	NUT, M6 NYLOCK PLATED		
8	86272040	57503	2	NUT, M3.5 X 2.8 HEX		
9	86223260	66085	1	PLUNGER, PLATFORM SWITCH		
10	86223580	67502	1	ROD, PIVOT, 8.5MM X 77		
11	86274340	70179	7	SCR, M6 X 16 PH		
12	86278060	70759	2	SET SCR, M4 X 4MM NP		
13	86277360	70833	1	SCR, M6 X 10 PH		
14	86277370	70834	1	SCR, M5 X 30 SHCS		
15	86277380	70835	4	SCR, M4.8 X 16 PHTF		
16	86277390	70836	2	SCR, M3.5 X 38 PH		
17	86312770	-	1	PLATFORM		
18	86007110	72123	1	SWITCH, 25A SPST 125-250V SNAP		
19	86224750	73993	1	SPRING, COMP, .48OD X .91L		
20	86279140	87085	6	WASHER,M6 SPLIT LOCK DIN127B		
21	86279720	87248	2	WASHER, M4 INT STAR		
22	86279730	87249	4	WASHER, M5 INT STAR		
23	86224360	730325	1	SPACER 12.7MMOD X 2.78W X 6L		
24	86224350	730305	1	SPACER, 8MM X 16LG		
25	86216380	140713	2	BUSHING, 8MM X 10 LG CLY		
26	86222780	620047	1	PLATE, PIVOT		
27	86222810	620050	1	PLATE, COVER		
28	86254970	730304	1	SPRING, COMP 18MM OD X 83 X 2		
29	86137300	87084	2	WASHER, M5 SPLIT LOCK PLTD		
30	86250280	68135	1	POTENTIOMETER, 5K OHMS		

NOTE: Complete plaform assembly is available as part no. 86313640.

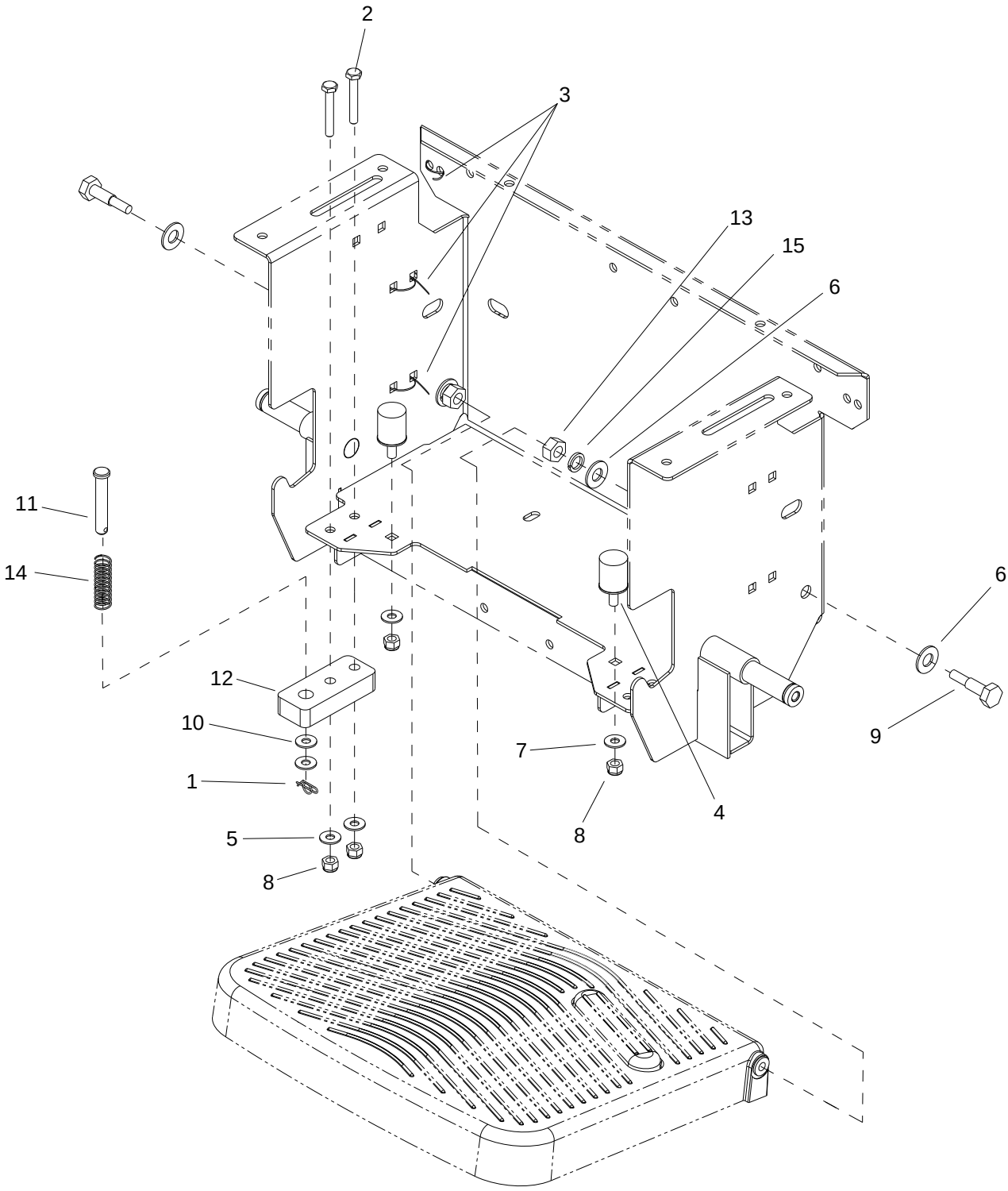
2
3
13
15
6
11
14
6
12
10
7
9
1
4
5
8
8

REF	PART NO.	PRV NO.	QTY	DESCRIPTION	SERIAL NO. FROM	NOTE
1	86008680	80607	1	COTTER, 1/2" RING		
2	86274690	70258	2	SCR, 5/16-18 X 1.5 HHCS GR5PLT		
3	86264920	27049	3	CABLE TIE, 7" UL/CSA		
4	86231070	730328	2	BUMPER, 1 X 1.375 RUBBER		
5	86010670	87029	3	WASHER, 5/16 FLAT SS		
6	86259430	87485	4	M12 FLAT WASHER		
7	86010770	87143	2	WASHER, 7/16ID X1D.08 FLT SS		
8	86270830	57023	4	NUT, 5/16-18 HEX NYLOCK SS		
9	86256470	70852	2	STUB AXLE, M12-1.75 X 45MM		
10	86278850	80613	2	WASHER, .506 ID X .94D X .064 NYL		
11	86248920	66487	1	PIN, CLEVIS 1/2 X 2.25		
12	86064480	629993	1	PLATE, SWITCH BASE		
13	86271190	57142	2	NUT, M12 X 1.75 HEX DIN934 PLT		
14	86007780	73576	1	SPRING, COMP .60D X2.0L X .045W		
15	86259440	87486	2	WASHER, M12 SPRING LOCK		

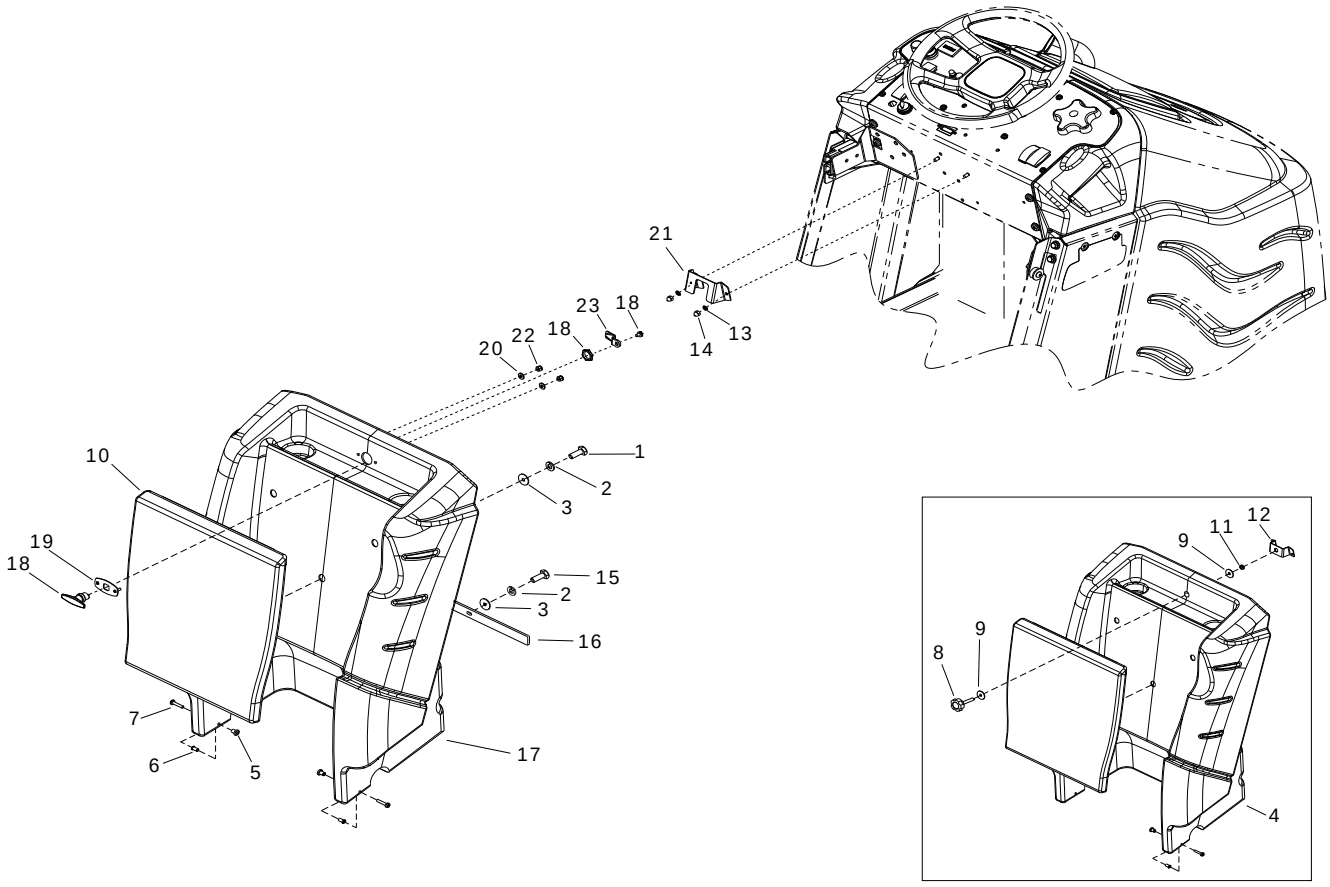
21
23
18
22
18
20
14
13
10
1
2
3
19
18
15
2
3
16
7
6
5
17
12
11
9
9
8
4

REF	PART NO.	PRV NO.	QTY	DESCRIPTION	SERIAL NO. FROM	NOTES:
1	86276780	70728	3	SCR, 5/16-18 X 3/4 HHCS SS		
2	86279130	87083	5	WASHER, 5/16 SPLIT LOCK PLTD		
3	86010670	87029	5	WASHER, 5/16 FLAT SS		
4	86031780	-	1	COVER, REAR DELUXE		
5	86005860	57273	2	NUT, 1/4-20 X 12MM HEX BARREL		
6	86228980	09152	2	BEARING FLANGED .377ID X .505OD		
7	86275870	70556	2	SCR, 1/4-20 X 1.5" PPHMS SS		
8	86242140	72193	1	KNOB, 3/8 -16 X 1.5		
9	86010770	87143	2	WASHER, 7/16ID X 1D X .08FLT SS		
10	86248380	66433	1	PAD, FLAT LEANING		
11	86005630	57022	1	NUT, 3/8-16 HEX NYLOCK THIN SS		
12	860710300	140786	1	BRKT, ASSEMBLY, REAR COVER		
13	86010780	87162	2	WASHER, 1/4 SPLIT LOCK		
14	86271940	57299	2	NUT, 1/4-20 ACORN SS		
15	86006560	70083	2	SCR, 5/16-18 X 1 HHCS SS		
16	86066940	140891	1	BAR, COVER		
17	86324320	-	1	REAR, COVER DELUXE,	*(3)	
18	86324640	-	1	HANDLE, CAM LATCH	*(3)	
19	86324760	-	1	PLATE, COVER LATCH	*(3)	
20	86010630	87013	2	WASHER, 1/4 ID X 5/8 OD SS	*(3)	
21	86324340	-	1	BRKT, REAR COVER	*(3)	
22	86005810	57245	2	NUT, 1/4-20 HEX NYLOCK SS	*(3)	
23	86324650	-	1	PAWL, HANDLE	*(3)	

*See Serial Number Page

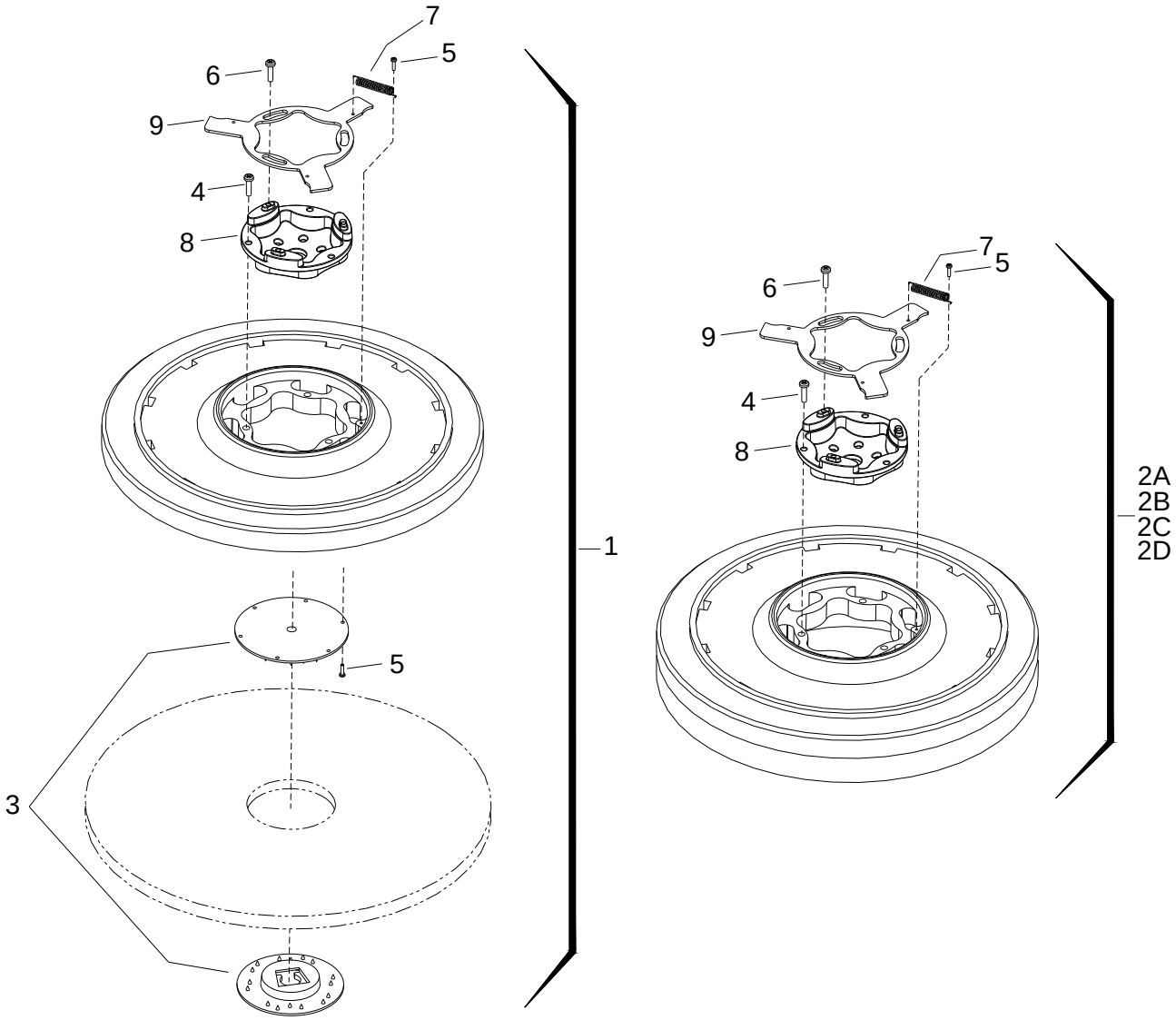
7
5
6
9
4
8
1
5
3
7
5
6
9
4
8
2A
2B
2C
2D

REF	PART NO.	PRV NO.	QTY	DESCRIPTION	SERIAL NO. FROM	NOTES:
1	86000170	02400	2	PAD DRIVER, 12" SD		
2A	86000180	02401	2	BRUSH, 12" POLYPROPYLENE SD		
2B	86000190	02402	2	BRUSH, 12" NYLON SD		
2C	86000200	02404	2	BRUSH, 12" MILD GRIT SD		
2D	86283820	02405	2	BRUSH, 12" SUPER AGG SD		
3	86005070	51284	1	LOCK, PAD CENTER SNAP, TWO STEP		
4	86276590	70695	3	SCR, #12 X 1 PPHSMS SS		
5	86276580	70694	1	SCR, 8-32 X 3/4 PTHMS		
6	86276600	70696	3	SCR, #10 X 3/4 PTHSMS SS		
7	86007910	73817	1	SPRING, EXT .31 D X 2.0 L X .03 W SS		
8	86007280	730011	1	SOCKET, DRIVE BRUSH		
9	86005940	62852	1	PLATE, BRUSH RELEASE		

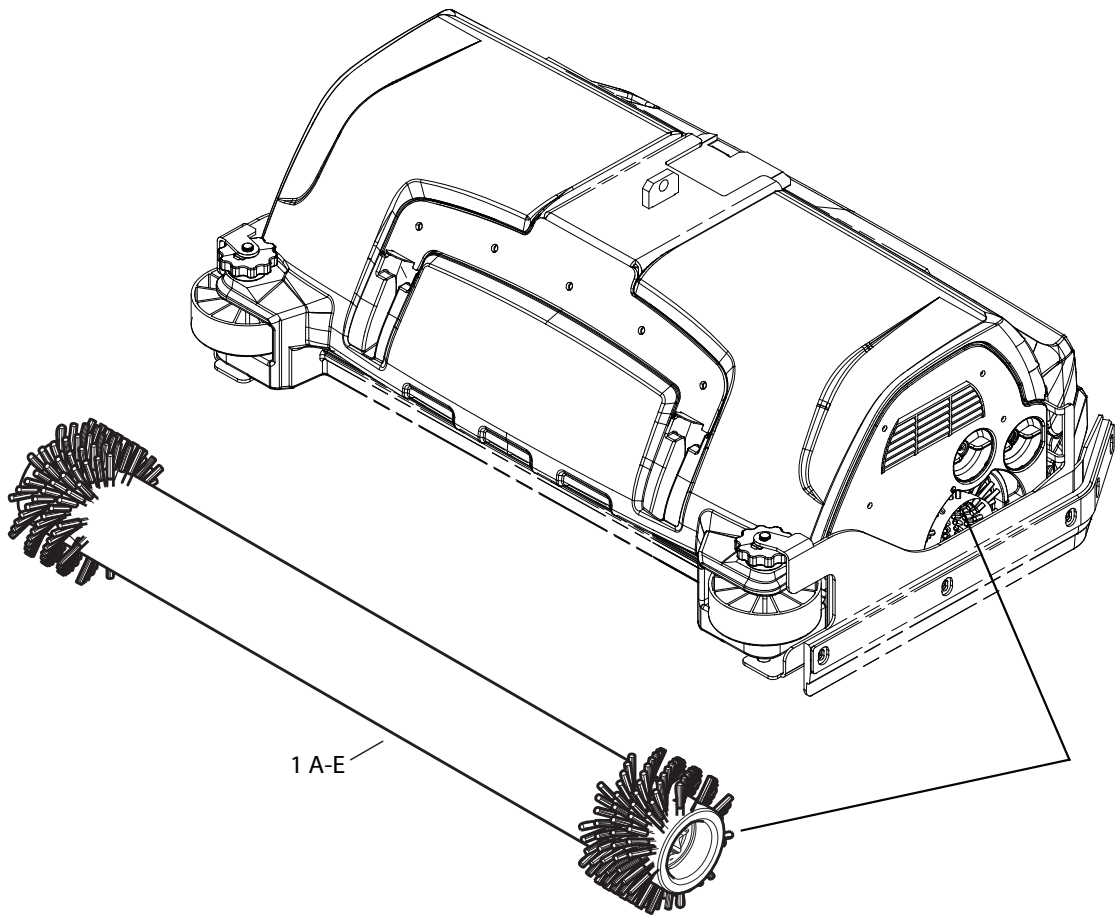
1 A-E

REF	PART NO.	PRV NO.	QTY	DESCRIPTION	SERIAL NO. FROM	NOTES:
1A	69069350	-	-	ROLLER BRUSH RED-BR 65		
1B	69069810	-	-	ROLLER BRUSH WHITE-BR 65		
1C	69069820	-	-	ROLLER BRUSH ORANGE-BR 65		
1D	69069830	-	-	ROLLER BRUSH GREEN-BR 65		
1E	69069840	-	-	ROLLER BRUSH BLACK-BR 65		

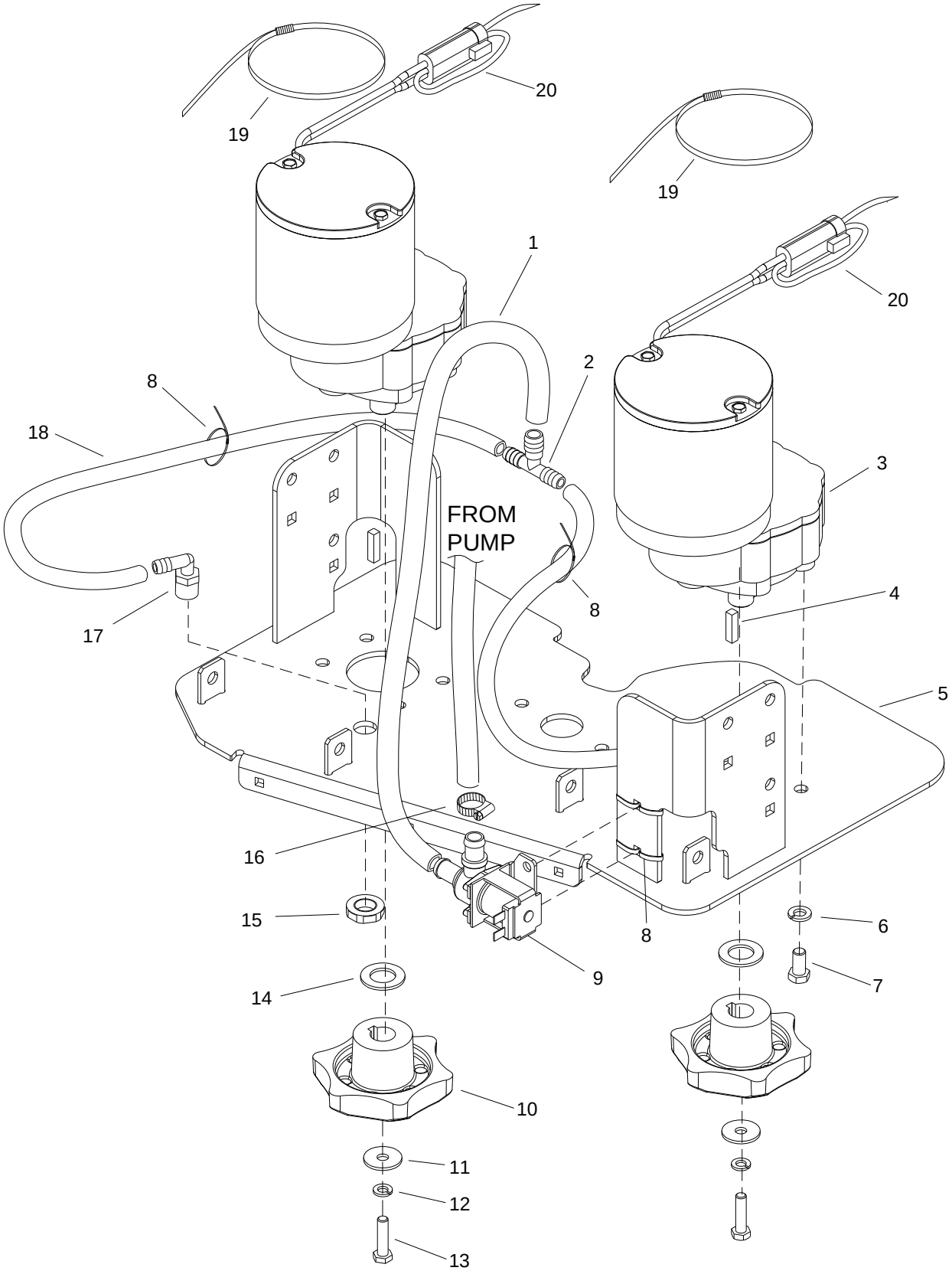
20
19
19
1
20
2
8
18
3
FROM
PUMP
8
4
17
5
16
15
8
6
9
14
7
10
11
12
13

REF	PART NO.	PRV NO.	QTY	DESCRIPTION	SERIAL NO. FROM	NOTES:
1	86281100	39274	1	HOSE, 1/2ID WIRE BOUND X 8		
2	86003580	34327	1	FITTING, 1/2"X3/8"X3/8" RED		
3	86005490	53808	2	MOTOR ASM, 36VDC300RPM GEAR		
-	86216200	14739	-	BRUSH SET MOTOR 53808		
4	86004810	48040	2	KEY, 1/4 SQ X 1.00		
5	86093990	730330	1	SCRUBDECK, 24IN		
6	86010790	87163	8	WASHER, 3/8 SPLIT LOCK PLTD		
7	86276970	70774	8	SCR, 3/8-16 X 3/4 HHCS SS		
8	86264920	27049	6	CABLE TIE, 7" UL/CSA		
9	86010600	84199	1	VALVE, SOLENOID, 36VDC, 1/2 BARB		
-	86003460	29260	-	DIAPHRAGM, SRVC PART SLND		
-	86136820	47395	-	SERVICE SLND SPRG KIT		
10	86003420	29220	2	DRIVER, BRUSH SD		
11	86279630	87212	2	WASHER, .344IDX1.130DX.09T PLT		
12	86279130	87083	2	WASHER, 5/16 SPLIT LOCK PLTD		
13	86007020	70673	2	SCR, 5/16-18 X 1.25 HHCS SS NP		
14	86279530	87173	2	WASHER, .765IDX1.310DX.09T SS		
15	86271830	57283	2	NUT, 3/8 NPT PLASTIC		
16	86233150	20042	1	CLAMP, 3/8 HOSE (D-SLOT)		
17	86001550	40043	2	HOSEBARB, 3/8MPT X 3/8 90D		
18	86281310	39326	2	HOSE, 3/8ID WIREBOUND X 8		
19	86002830	27196	2	CABLE TIE, .375 X 24.7		
20	86264940	27051	2	CABLE TIE, 11.38" UL/CSA		

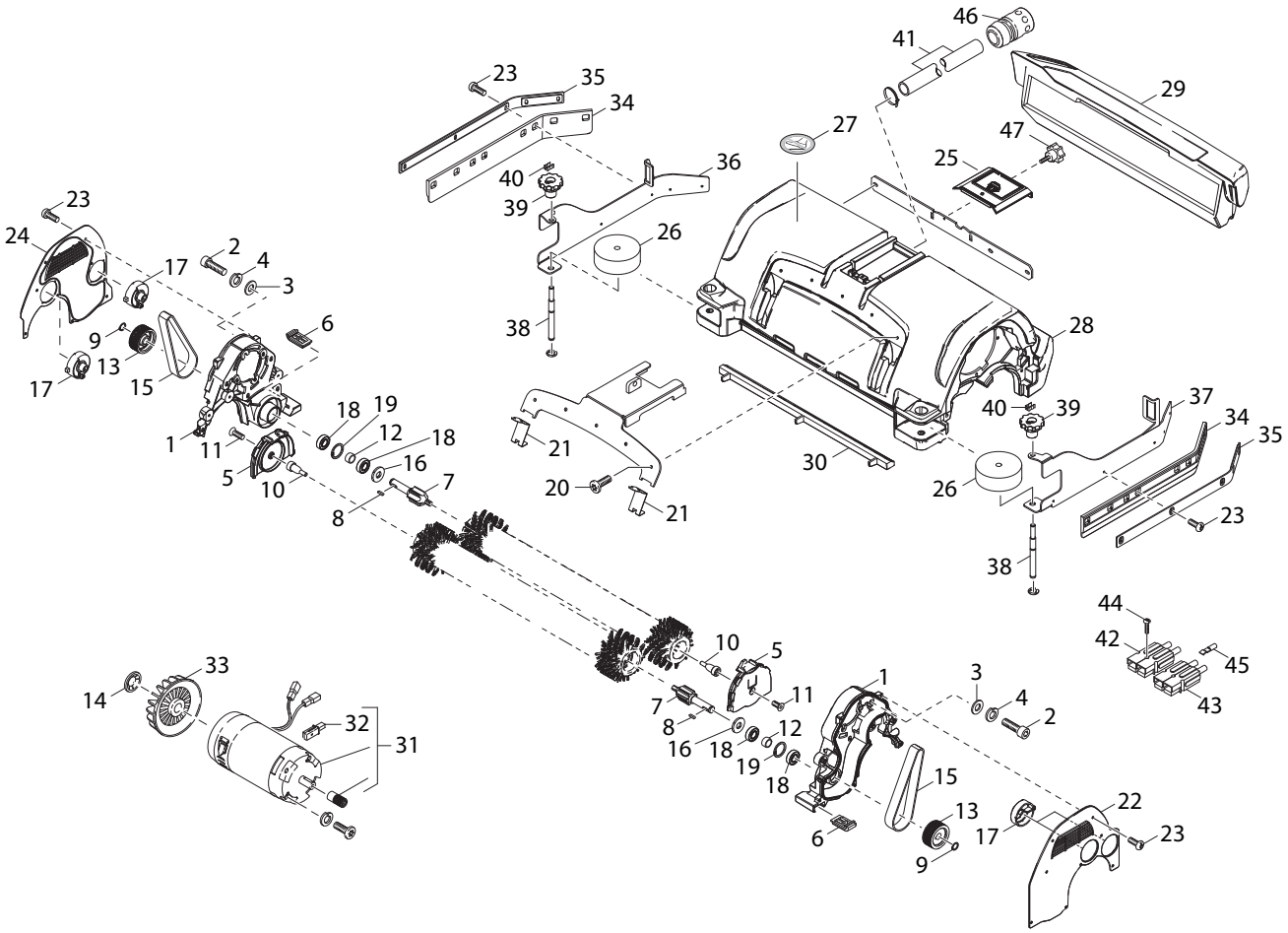
46
41
29
23
35
34
27
47
25
36
40
39
26
23
24
2
4
17
3
6
9
13
15
17
38
28
18
19
12
18
16
7
1
11
5
10
8
21
20
21
30
40
39
37
34
35
26
23
38
44
42
45
43
10
5
11
1
3
4
2
7
8
16
18
12
19
18
15
13
6
9
17
22
23
33
14
32
31

REF	PART NO.	QTY	DESCRIPTION	SERIAL NO. FROM	NOTES:
1	50448660	2	RETAINER PLATE TRANSMISSION		
2	73060310	10	SCREW M 6X16-A2-70 DIN 7984		
3	73120260	10	WASHER 6-A2 ISO 7090		
4	73130030	10	SPRING WASHER B 6FST-A3E DIN 127		
5	50448580	2	HOLDER-UP		
6	50560100	2	ROCKER BR-VS		
7	51005530	2	DRIVESHAFT BR 65/90		
8	73180020	2	PARALLEL KEY 5X5X16-C45R DIN 6885-1		
9	73430150	2	LOCKING RING 15X1-FST-RF DIN 471		
10	51163400	2	BOLT HOLDER-UP		
11	73056370	2	COUNTERSUNK SCREW M8X16-A2-70 ISO 10642		
12	51163540	2	BRUSH TRANSMISSION BR		
13	56254830	2	BELT PULLEY 57MM		
14	63431490	2	QUICK-FASTENER		
15	63484420	2	RIBBED V-BELT		
16	63631580	2	JOINT RING NILOSRING		
17	50332060	4	LOCKING PART		
18	74011150	4	BALL BEARING 6002-2RS-WAELZLAGST DIN 62		
19	73432310	2	LOCKING RING 32X1,2-ST-PH DIN 472		
20	73030470	5	SCREW M6X16-ST-R3R (IN6RD)		
21	50333940	2	LOCKING PART		
22	50332410	1	COVERING CAP LEFT		
23	73030370	28	SCREW M5X10-ST-P2R (IN6RD)		
24	50332420	1	COVERING CAP RIGHT		
25	50334030	1	COVER PLATE		
26	55150960	2	ROLLER		
27	53830970	1	DECAL		
28	50615800	1	BRUSH HOUSING BR 65		
29	50707530	1	TANK REFUSE 65		
30	51902610	1	STRIP WATER DISTRIBUTOR		
31	46239200	2	MOTOR COMPLETE 24V/600W		
32	66102160	1	CARBON BRUSHES		
33	66130250	2	BLOWER WHEEL		
34	53948230	2	SPLASH GUARD		
35	50448670	2	RETAINER STRIP SPLASH GUARD		
36	50094010	1	BRACKET RIGHT SCRAPER LIP		
37	5009420	1	BRACKET LEFT SCRAPER LIP		
38	51163390	2	THREADED BOLT		
39	50332400	2	HAND WHEEL		
40	63304070	2	SPRING CLIP		
41	63908920	1	SPIRAL HOSE		
42	66463290	2	RED PLUG		
43	66463300	2	BLUE PLUG		
44	73031070	3	SCREW 5X16-10.9-P2R (K-IN6RD)		
45	66469790	4	SWITCH CONTACT		
46	63884820	1	HOSE COUPLING		
47	63211960	1	STAR GRIP M5X10		
-	27630040	-	BRUSH HEAD R 65 CM W/SIDE		DECK, COMPLETE

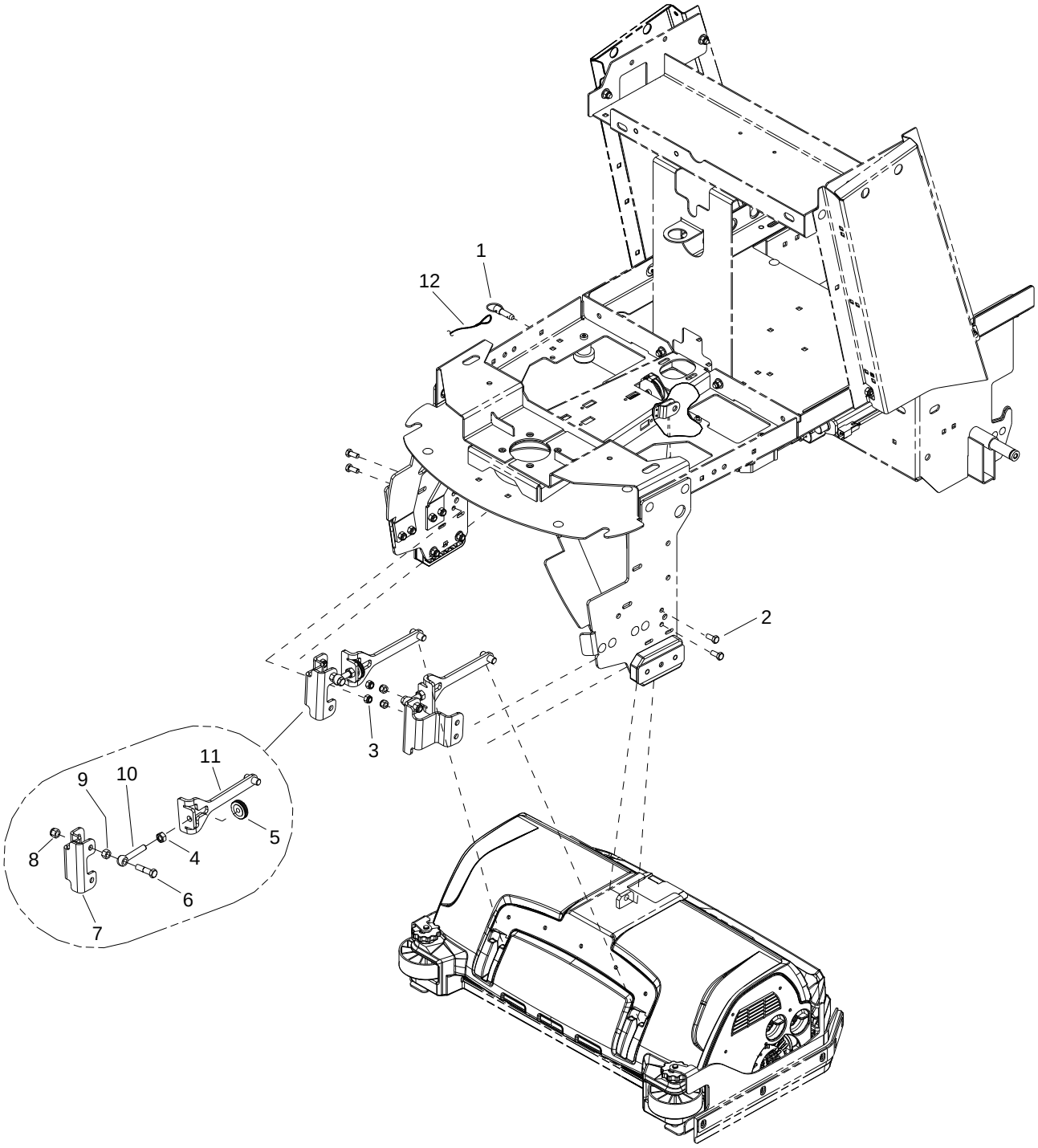
1
12
2
3
11
9
10
5
8
4
6
7

REF	PART NO.	PRV NO.	QTY	DESCRIPTION	SERIAL NO. FROM	NOTES:
1	86315230	-	1	PIN, BALL LOCK		
2	86276780	70728	4	SCR, 5/16-18 X 3/4 HHCS SS		
3	86270830	57023	4	NUT, 5/16-18 HEX NYLOCK SS		
4	73110060	-	2	HEXAGON NUT M10-8-A3E ISO 4032		
5	73100410	-	2	KNURLED NUT M10-CU3 DIN 467		
6	86274660	70255	2	SCR, 3/8-16 X 1.5 HHCS GR5 PLT		
7	86320580	-	2	BRKT, DECK LINKAGE		
8	86005700	57119	2	NUT, 3/8-16 HEX NYLOCK		
9	86005730	57111	2	NUT 3/8-16 HEX		
10	64014190	-	2	EYE SCREW LB M10X60 DIN 444		
11	44812510	-	2	EYE ROD		
12	86270510	51457	1	LANYARD, .093 X 6 NYLON		

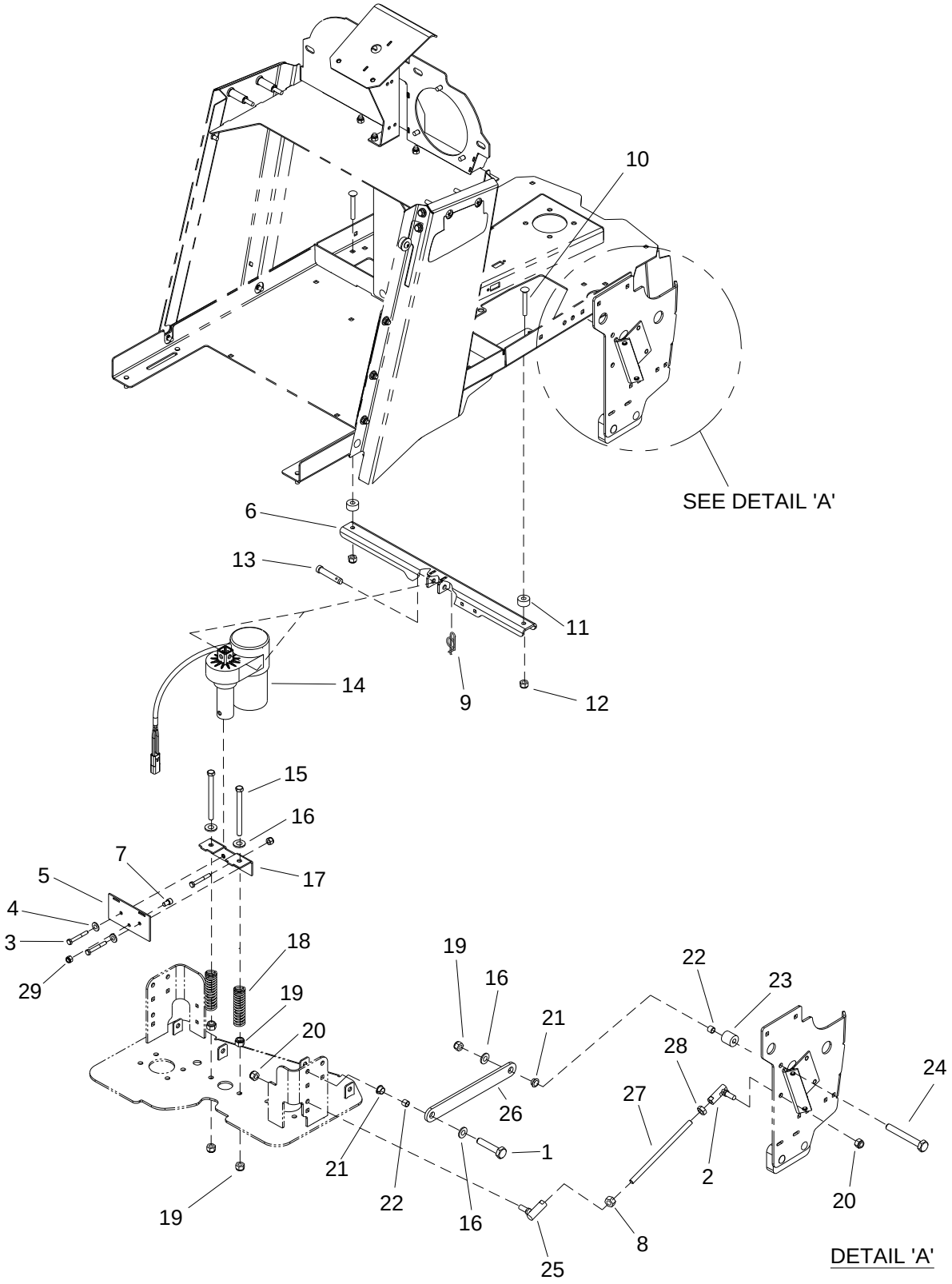
10
SEE DETAIL 'A'
6
13
11
14
9
12
15
16
7
5
17
4
3
29
18
19
20
19
16
21
22
23
28
24
27
26
1
21
22
16
25
8
2
20
19
DETAIL 'A'

REF	PART NO.	PRV NO.	QTY	DESCRIPTION	SERIAL NO. FROM	NOTES
1	86276920	70755	2	SCR, 3/8-16 X 1 HHCS SS NP		
2	86008810	80697	2	BALL JOINT ASY, 3/8-24 RH		
3	86273850	70022	2	SCR, 1/4-20 X 2 HHCS		
4	86010780	87162	2	WASHER, 1/4 SPILT LOCK PLTD		
5	86079030	620058	1	PLATE, ACTUATOR SPR, SCRUBDECK		
6	86091760	140741	1	BRKT, ACTUATOR MTG, SCRUBBER		
7	86274110	70094	2	SCR, 1/4-20 X 1/2 SHCS		
8	86005830	57263	2	NUT, 3/8-24 UNF LH		
9	86008660	80605	1	COTTER, 5/16" RING		
10	86277030	70780	2	SCR, 5/16-18 X 1.25 CARRIAGE SS		
11	86224370	730335	2	SPACER, 1 OD X .391 ID X .500		
12	86270830	57023	2	NUT, 5/16-18 HEX NYLOCK SS		
13	86272460	66268	1	PIN, CLEVIS 5/16 X 3.00 PLTD		
14	86011950	-	1	ACTUATOR, 36VDC 3.5 STRK		
15	86275510	70494	2	SCR, 3/8-16 X 4.5" HHCS GR5		
16	86010770	87143	6	WASHER, 7/16ID X IDX.08 FLT SS		
17	86070810	140739	1	BRKT, ACTUATOR SPGS, SCRUBDECK		
18	86255450	81376	2	SPRING COMP .96D X 4.0L X .135W		
19	86005630	57022	8	NUT, 3/8-16 HEX NYLOCK THIN SS		
20	86271530	57216	4	NUT, 3/8-24 HEX NYLOCK		
21	86009050	81324	4	BEARING, 1/2 ID X 11/32L NYLON		
22	86008460	80102	4	SPACER, .500OD X .391ID C .400		
23	86224380	730336	2	SPACER, 1 OD X 0.391 ID X 1.063		
24	86274010	70070	2	SCR, 3/8-16 X 2 HHCS		
25	86001320	140353	2	BALL JOINT ASSY, 3/8-24 LH		
26	86077330	31373	2	LINKAGE, .25 X 1.25 X 9.25		
27	86223540	66483	2	ROD, SCRUB LIFT		
28	86005800	57217	2	NUT, 3/8-24 HEX JAM		
29	86005810	57245	2	NUT, 1/4-20 HEX NYLOCK SS		

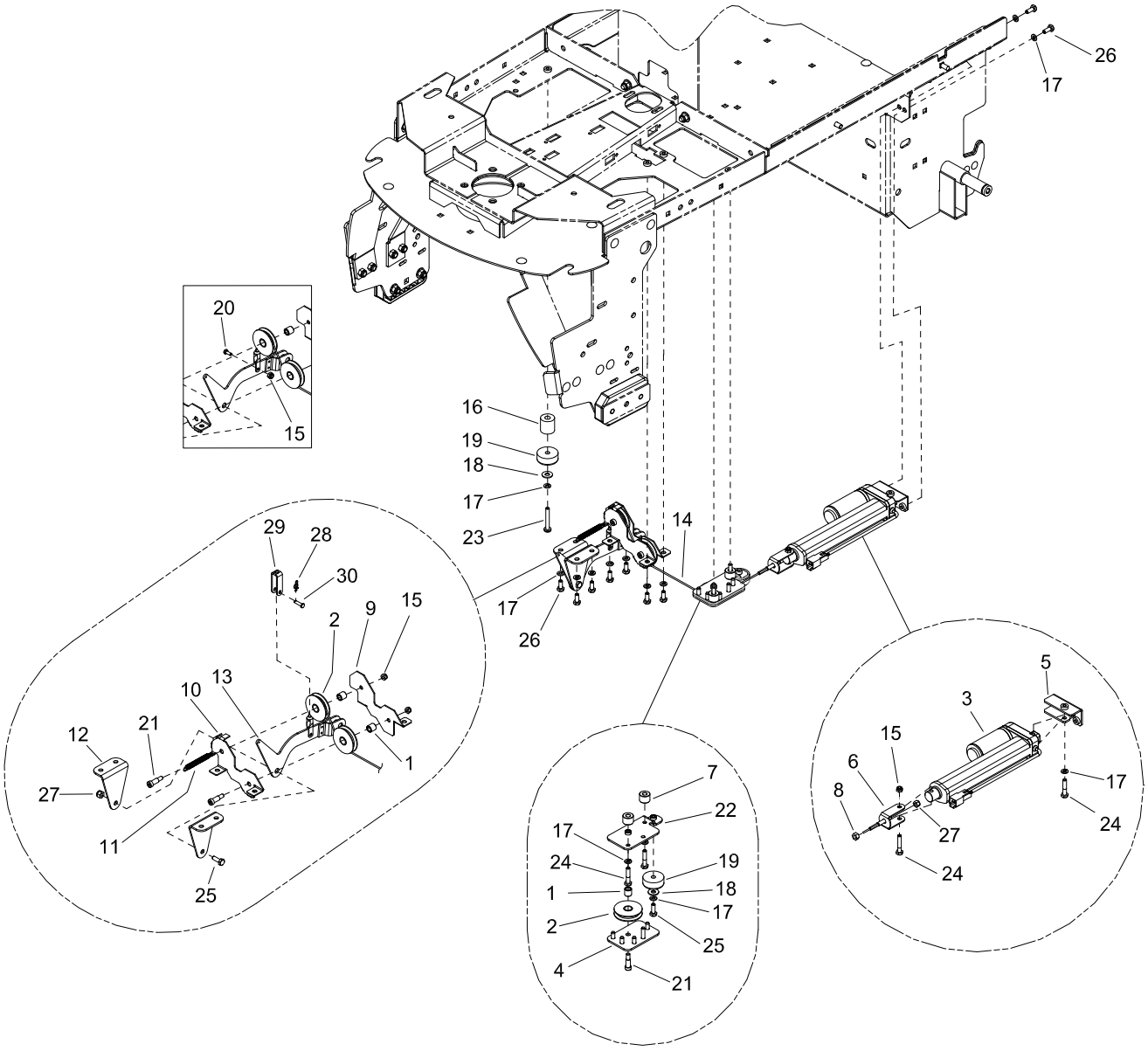
26
17
20
15
16
19
18
17
23
14
17
26
29
28
30
15
2
9
10
13
12
21
27
11
1
25
7
22
17
24
19
1
18
17
2
25
4
21
5
3
15
6
8
17
24
27
24

REF	PART NO.	PRV NO.	QTY	DESCRIPTION	SERIAL NO. FROM	NOTES:
1	86317340	-	3	SPACER, .498 X.313 X.500		
2	86317330	-	3	PULLEY, 2 IN.		
3	86320800	-	1	ACTUATOR, 36VDC, 3" STROKE		
4	86320690	-	1	PLATE ASSY, RETAINER, CABLE		
5	86315260	-	1	BRKT ASSY, ACTUATOR		
6	86315250	-	1	YOKE, CABLE		
7	86320680	-	2	SPACER, .31ID X .75OD X .56LG		
8	86270770	57006	1	NUT, 1/4-20 HEX		
9	86315150	-	1	PLATE, PULLEY, REAR		
10	86315140	-	1	PLATE, PULLEY, FRONT		
11	86315120	-	1	SPRING, EXTENSION		
12	86315110	-	2	BRKT, DECK PIVOT		
13	86315090	-	1	BELLCRANK ASSY, DECK		
14	86314810	-	1	CABLE ASSY, DECK LIFT		
15	86270990	57090	4	NUT, 10-32 HEX NYLOCK SS		
16	86224380	730336	1	SPACER, 1 OD X .391 ID X 1.063		
17	86010780	87162	15	WASHER, 1/4 SPLIT		
18	86010670	87029	2	WASHER, 5/16 X 3/4 SS		
19	86231090	80809	2	BUMPER, RUBBER 5/16" ID X 1.50		
20	86006980	70591	1	SCR, 10-32 X 1/2 HHCS SS		
21	86136850	70241	3	SHOULDER BOLT, 5/16 OD X 5/8 L		
22	86320610	-	1	PLATE ASSY, PULLEY MOUNT		
23	86273920	70049	1	SCR, 1/4-20 X 1.75 PPHMS SS		
24	86273820	70019	4	SCR, 1/4-20 X 1.25 HHCS SS		
25	86273780	70015	2	SCR, 1/4-20 X 3/4 HHCS SS		
26	86273750	70011	10	SCR, 1/4-20 X 5/8 HHCS SS		
27	86005810	57245	2	NUT, 1/4-20 HEX NYLOCK SS		
28	86008650	80604	1	COTTER 1/4” RING	*(4)	
29	86334890	-	1	BRACKET, LIFT	*(4)	
30	86272470	66270	1	PIN, CLEVIS 3/16 X .75 PLTD	*(4)	

* See serial number page.

**See Manufacturer for Serial Number.

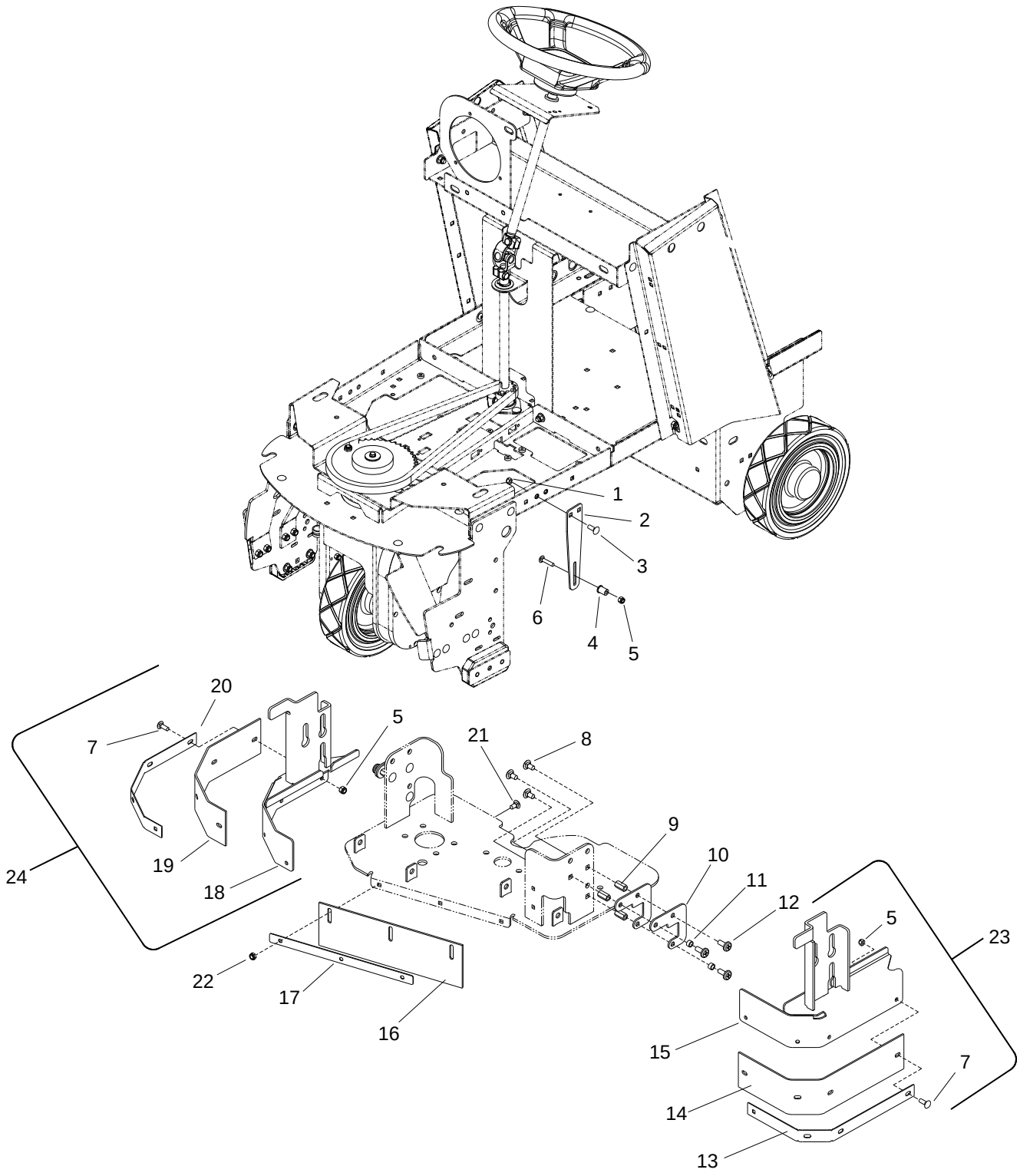
1
2
3
6
4
5
20
7
5
21
8
9
10
11
12
5
23
24
19
18
22
17
16
15
14
13
7

REF	PART NO.	PRV NO.	QTY	DESCRIPTION	SERIAL NO. FROM	NOTES
1	86270830	57023	4	NUT, 5/16-18 HEX NYLOCK SS		
2	86070960	140773	2	BRKT, SKIRT STOP, SCRUBDECK		
3	86276070	70593	4	SCR, 5/16-18 X 3/4 CARRIAGE SS		
4	86228900	09138	2	BEARING FLANGED, .252IDX.503OD		
5	86005810	57245	6	NUT, 1/4-20 HEX NYLOCK SS		
6	86276330	70634	2	SCR, 1/4-20 X 1.25 CARRIAGE BZ		
7	86276950	70772	8	SCR, 1/4-20 X 3/4 CARRIAGE SS		
8	86277410	70840	6	SCR, 5/16-18 X 5/8 CARRIAGE SS		
9	86271950	57300	6	NUT, 5/16-18 X 1 COUPLING SS		
10	86079130	620068	4	PLATE, SKIRT, SPACER		
11	86007650	730329	4	SPACER, .438D X .317ID X .25L		
12	86007070	70849	6	SCR, 5/16-18 X 1.00 PTMS SS		
13	86066460	140769	1	BAND, SKIRT, LEFT		
14	86001560	140754	1	BLADE, SKIRT, SCRBDCK, 24IN LFT		
15	86091770	140765	1	BRKT, SKIRT SCRUBDECK, LEFT		
16	86001700	140780	1	BLADE, SKIRT, SCRUBDECK, FRONT		
17	86066480	140781	1	BAND, SKIRT, SCRUBECK, FRONT		
18	86091780	140766	1	BRKT, SKIRT, SCRUBDECK, RIGHT		
19	86001570	140755	1	BLADE, SKIRT, SCRBDCK, 24IN RGT		
20	86066470	140770	1	BAND, SKIRT, RIGHT		
21	86277500	70853	3	SCR, 1/4-20 X 5/8 CARR SS		
22	86271870	57290	3	NUT, 1/4-20 HEX NYLOCK THIN SS		
23	86026470	47459	-	KIT, SKIRT LEFT		SERVICE ONLY
24	86026460	47458	-	KIT, SKIRT RIGHT		SERVICE ONLY

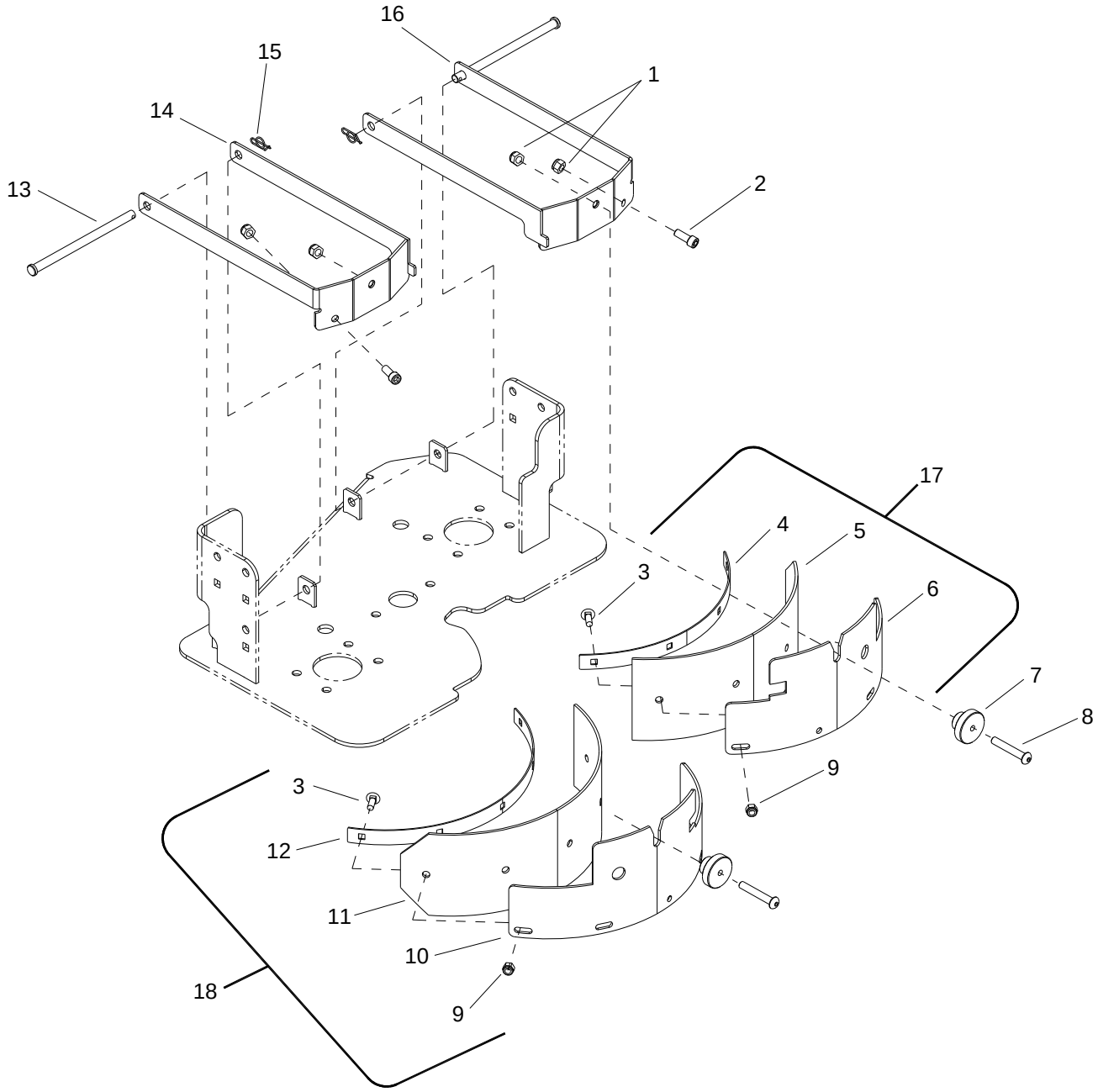
16
15
1
14
13
2
17
4
5
3
6
7
8
9
3
12
11
10
18
9

REF	PART NO.	PRV NO.	QTY	DESCRIPTION	SERIAL NO. FROM	NOTES:
1	86270830	57023	4	NUT, 5/16-18 HEX NYLOCK SS		
2	86277050	70782	2	SCR, 5/16-18 X 3/4 SHCS		
3	86276950	70772	9	SCR, 1/4-20 X 3/4 CARRIAGE SS		
4	86066430	140747	1	BAND, RIGHT AQUAMIZER		
5A	86001540	140753	1	BLADE, AQUAMIZER, 12IN RGT		
5B	86283550	140939	1	BLADE, AQMZR 12 RT URETHANE		
6	86071000	140779	1	BRKT, AQUAMIZER BLADE, RGT		
7	86219690	48080	2	KNOB, 1.5 OD X 5/16-18		
8	86277230	70815	2	SCR, 5/16-18 X 2.25 BSHCS SS		
9	86005810	57245	9	NUT, 1/4-20 HEX NYLOCK SS		
10	86070990	140778	1	BRKT, AQUAMIZER BLADE, LEFT		
11A	86001520	140752	1	BLADE, AQUAMIZER, 12IN LEFT		
11B	86283560	140940	1	BLADE, AQMZR 12 LT URETHATNE		
12	86066420	140746	1	BAND, LEFT AQUAMIZER		
13	86272540	66465	2	PIN, CLEVIS, 3/8 X 6.12, PLTD		
14	86091800	140776	1	BRKT, AQUAMIZER MTG, LEFT		
15	86008670	80606	2	COTTER, 3/8" RING		
16	86091790	140774	1	BAND, LEFT AQUAMIZER		
17	86024990	47456	-	AQUAMIZER RIGHT ASM. CHARIOT		
18	86025000	47457	-	AQUAMIZER LEFT ASM. CHARIOT		

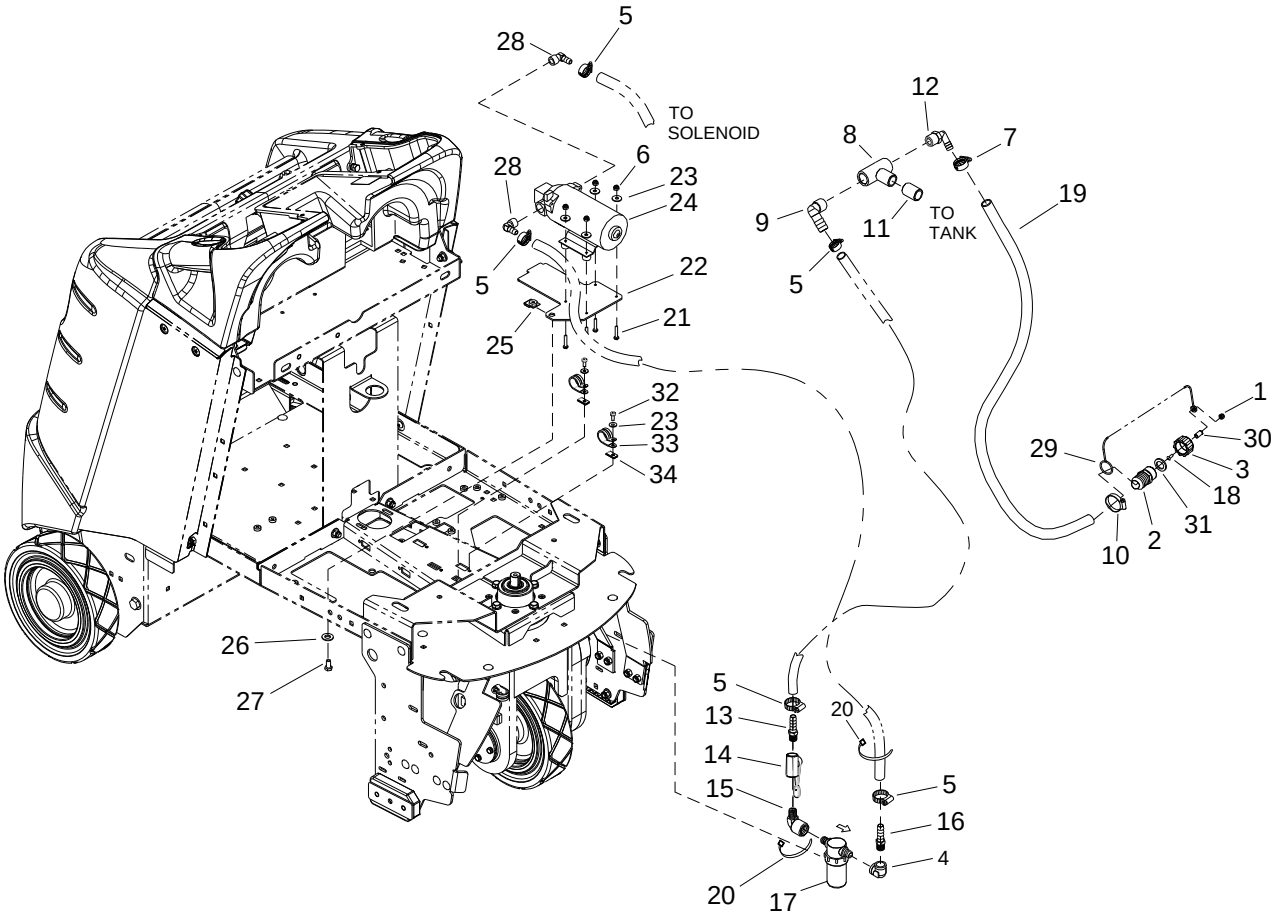
5
28
TO
SOLENOID
6
28
23
24
5
22
25
21
32
23
33
34
12
8
7
19
9
11
TO
TANK
5
1
29
30
3
18
31
2
10
26
27
5
13
14
15
20
5
16
4
20
17

REF	PART NO.	PRV NO.	QTY	DESCRIPTION	SERIAL NO. FROM	NOTES:
1	86248010	57312	1	NUT, 8/32 ACORN CAP, PLATED		
2	86226950	40109	1	1" HOSE BARB X 3/4" GHT NYLON		
3	86073960	22104	1	CAP, 3/4" GHT W/.17 HOLE		
4	86235450	31068	1	ELBOW, 3/8 FPT PVC SCH 80		
5	86233150	20042	5	CLAMP, 3/8 HOSE (D-SLOT)		
6	86270990	57090	4	NUT, 10-32 HEX NYLOCK SS		
7	86233300	20101	1	CLAMP, 1.25" WORM GEAR SS		
8	86198050	81923	1	TEE, 3/4 FPT		
9	86240390	40075	1	HOSEBARB, 3/4 MPT X 1/2 90D		
10	86233110	20018	1	CLAMP, 1.0" WORM GEAR		
11	86247760	80960	1	NIPPLE, 3/4 CLOSE PVCE		
12	86240600	41526	1	HOSEBARB, 3/4 MPTX1, HOSE 90DEG		
13	86197540	40013	1	HOSEBARB, 3/8 MPT X 1/2 DL		
14	86225680	84201	1	VALVE, 3/8" FPT BALL		
15	86197420	31026	1	ELBOW, 3/8 NPT STREET		
16	86001590	40049	1	HOSEBARB, 3/8 MPT X 1/2 NYLON		
17	86007940	73836	1	STRAINER, DEEP, 100 MESH		
-	86005870	59021	-	O-RING, FILTER SEAL RON-VIK		
-	86136800	73839	-	SCREEN, 100 MESH STRAINER DEEP		
18	86252730	70887	1	SCR, 8-32 X 1/2 BHCS SST		
19	86315510	-	1	HOSE, 1 X 40 DRAIN		
20	86264920	27049	3	CABLE, TIE. 7" UL/CSA		
21	86274410	70195	4	SCR, 10-32 X 1.25 PPHMS SS		
22	86070690	140724	1	BRKT, SOLUTION PUMP		
23	86010650	87018	6	WASHER, #10 X 9/16 OD		
24	86006100	65176	1	PUMP ASM, 36V		
25	86271820	57270	1	NUT, 5/16-18 CAPTIVE "J" PLTD		
26	86279130	87083	1	WASHER, 5/16 SPLIT LOCK PLTD		
27	86276780	70728	1	SCR, 5/16-18 X 3/4 HHCS SS		
28	86197940	40027	2	HOSEBARB, 3/8MPTX1/2 90D DL		
29	86246090	51461	1	LANYARD, .093 X 6", LOOP - .26 EYE		
30	86254320	730400	1	SPACER, .17 ID X .25 OD X 3/16 LG		
31	86259450	87507	1	WASHER, 1.0 D X .1 THK, SEAL		
32	86274070	70086	2	SCR,10-24X1/2PPHMS		
33	86233390	80887	2	CLAMP, 7/8 DIA ‘P" CUSHIONED		
34	86270860	57028	2	NUT, 10-24 U-TYPE SPEED		

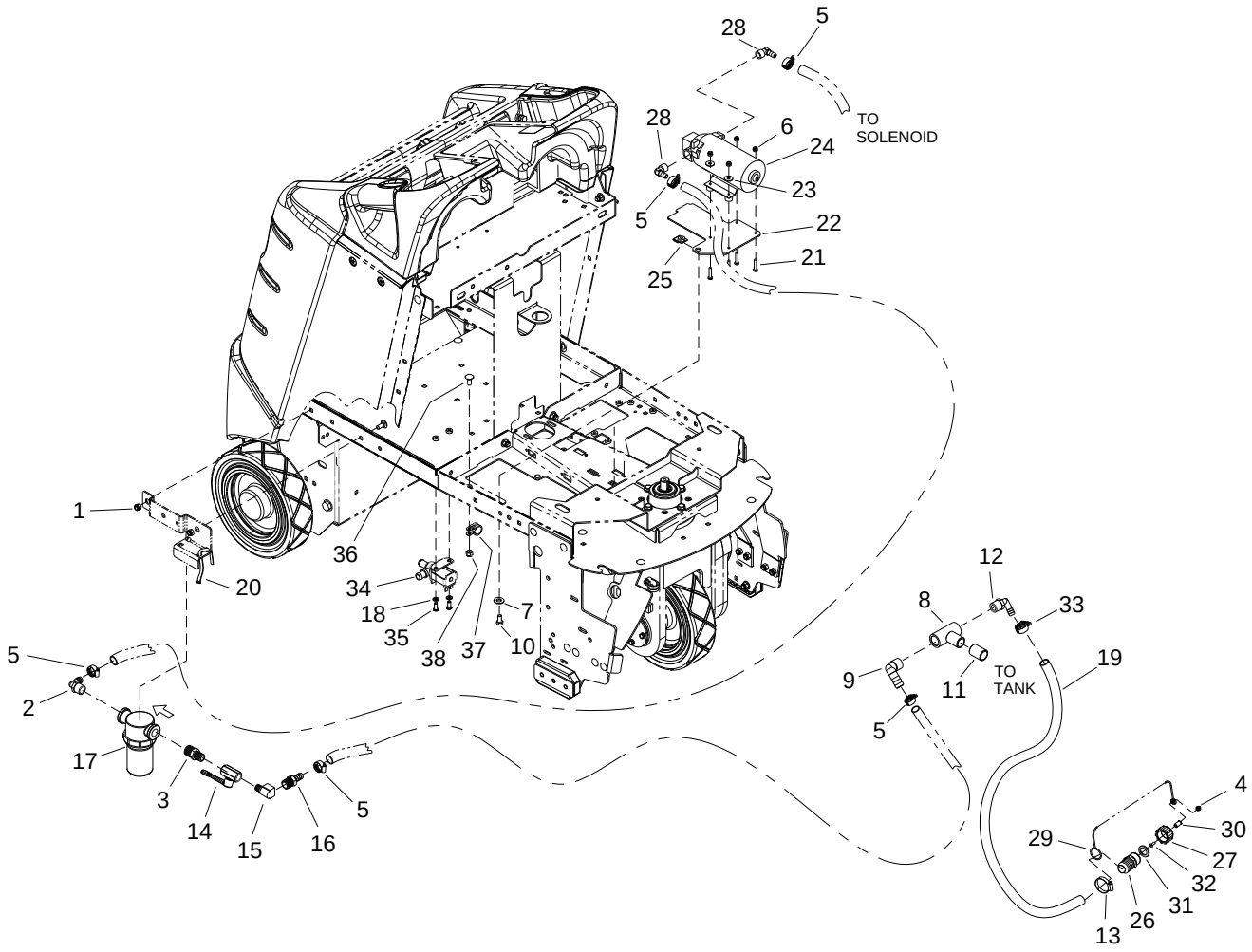
28
5
TO
SOLENOID
28
6
24
23
5
22
21
25
1
20
36
34
18
35
38
37
7
10
12
8
33
19
9
11
TO
TANK
5
5
2
17
3
14
15
16
5
4
29
30
27
32
31
26
13

REF	PART NO.	PRV NO.	QTY	DESCRIPTION	SERIAL NO. FROM	NOTES:
1	86270830	57023	2	NUT, 5/16-18 HEX NYLOCK SS		
2	86001530	40039	1	HOSE BARB, 1/2 MPT X 1/2 HOSE 90		
3	86188210	11-800354	1	NIP, 1/2 X 3/8 HEX BR		
4	86248010	57312	1	NUT, 8/32 ACORN CAP, PLATED		
5	86233150	20042	5	CLAMP, 3/8 HOSE (D-SLOT)		
6	86270990	57090	4	NUT, 10-32 HEX NYLOCK SS		
7	86279130	87083	1	WASHER, 5/16 SPLIT LOCK PLTD		
8	86198050	81923	1	TEE, 3/4 FPT		
9	86240390	40075	1	HOSEBARB, 3/4 MPT X 1/2 90D		
10	86276780	70728	1	SCR, 5/16-18 C 3/4 HHCS SS		
11	86247760	80960	1	NIPPLE, 3/4 CLOSE PVCE		
12	86240600	41526	1	HOSEBARB, 3/4 MPTX1, HOSE 90DEG		
13	86233110	20018	1	CLAMP, 1.00" WORM GEAR		
14	86225680	84201	1	VALVE, 3/8" FPT BALL		
15	86197420	31026	1	ELBOW, 3/8" NPT STREET		
16	86197540	40013	1	HOSEBARB, 3/8 MPT X 1/2 DL		
17	86256120	730368	1	STRAINER, 1/2 FPT 100 MESH		
-	86005870	59021	-	O-RING, FILTER SEAL RON-VIK		
-	86136800	73839	-	SCREEN, 80 MESH STRAINER DEEP		
18	86010780	87162	2	WASHER, 1/4 SPLIT LOCK PLTD		
19	86315510	-	1	HOSE, DRAIN 1.0 X 110 CONV		
20	86264920	27049	2	CABLE, TIE. 7" UL/CSA		
21	86274410	70195	4	SCR, 10-32 X 1.25 PPHMS SS		
22	86070690	140724	1	BRKT, SOLUTION PUMP		
23	86010650	87018	4	WASHER, #10 X 9/16 OD		
24	86006100	65176	1	PUMP ASM, 36V		
25	86271820	57270	1	NUT, 5/16-18 CAPTIVE "J" PLTD		
26	86226950	40109	1	1" HOSEBARB X 3/4" GHT NYLON		
27	86073960	22104	1	CAP, 3/4" GHT W/.17 HOLE		
28	86197940	40027	2	HOSEBARB, 3/8MPTX1/2 90D DL		
29	86246090	51461	1	LANYARD, .093 X 6", LOOP - .26 EYE		
30	86254320	730400	1	SPACER, .17 ID X .25 OD X 3/16 LG		
31	86259450	87507	1	WASHER, 1.0 D X .1 THK, SEAL		
32	86252730	70887	1	SCR, 8-32 X 1/2 BHCS SST		
33	86233300	20101	1	CLAMP, 1.25" WORM GEAR SS		
34	86010600	84199	1	VALVE SOLENOID, 36VDC, 1/2 BARB		
35	86174400	70194	2	SCR, 1/4-20 X 5/8 BHCS		
36	86276070	70593	1	SCR, 5/16-18 X 3/4 CARRIAGE SS		
37	86233410	81270	1	CLAMP, 3/4 DIA CUSHION .406DIA		
38	86270830	57023	1	NUT 5/16-18 HEX NYLOCK SS		

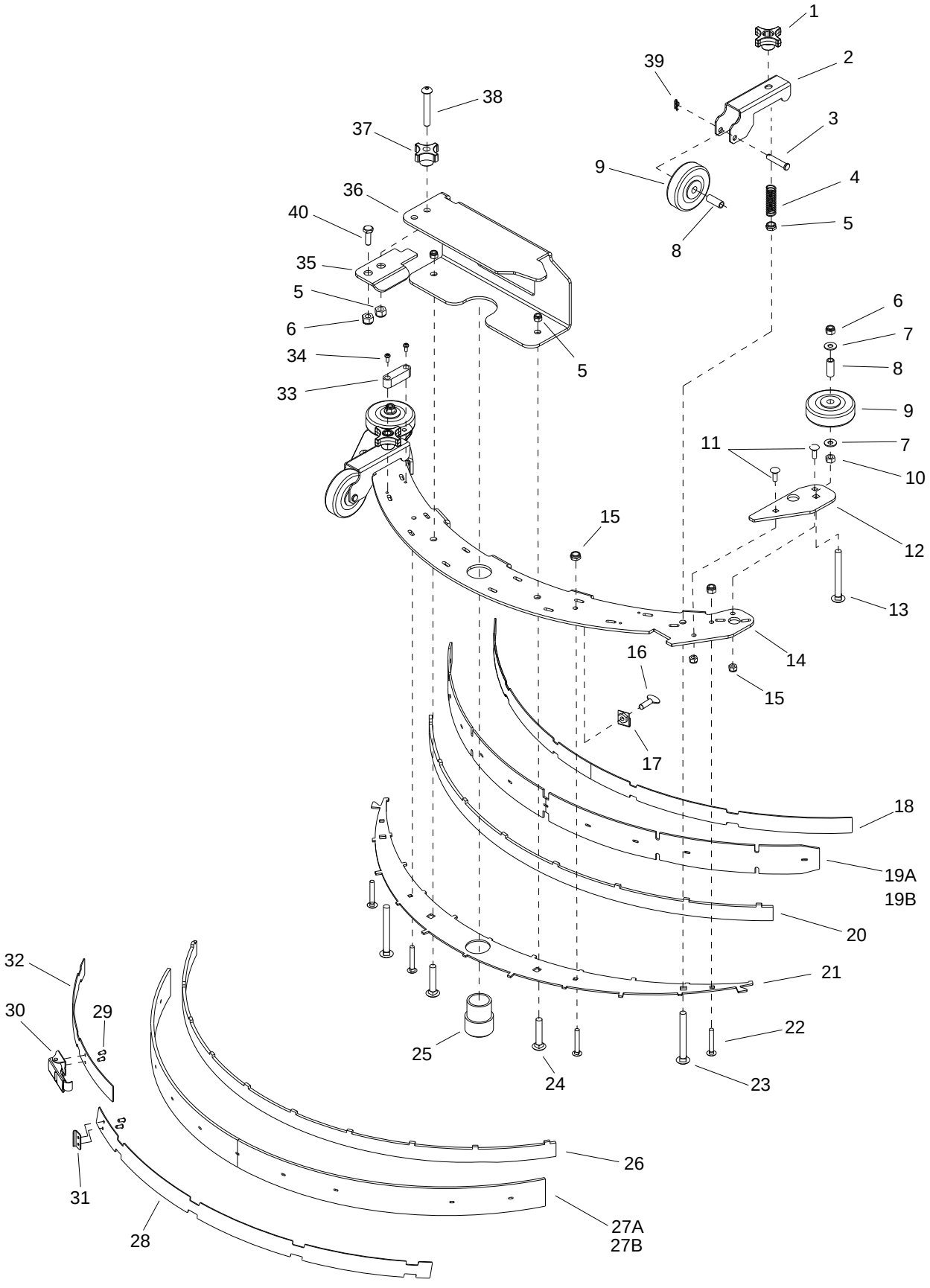
1
2
39
38
3
37
9
4
36
40
8
5
35
5
6
5
6
7
34
8
33
9
11
7
10
15
12
13
14
16
15
17
18
19A
19B
20
21
32
30
29
22
25
24
23
26
31
28
27A
27B

REF	PART NO.	PRV NO.	QTY	DESCRIPTION	SERIAL NO. FROM	NOTES
1	86004890	48095	2	KNOB, ALUM 3/8-16 NYLOCK NUT SS		
2	86070920	140759	2	BRKT, SQG WHEEL		
3	86006270	66276	2	PIN, CLEVIS 5/16 X 1.63 PLTD		
4	86007780	73576	2	SPRING, COMP .60D X 2.0L X .045 W		
5	86005630	57022	2	NUT, 3/8-16 HEX NYLOCK THIN SS		
6	86270830	57023	3	NUT, 5/16-18 HEX NYLOCK SS		
7	86010670	87029	4	WASHER, 5/16 FLAT SS		
8	86001350	140390	2	BUSHING, SPANNER .435 X 1.10		
9	86011020	89202	4	WHEEL, 3" DIA CUSHION RUBBER		
10	86005650	57031	2	NUT, 5/16-18 HEX		
11	86276950	70772	4	SCR, 1/4-20 X 3/4 CARRIAGE SS		
12	86083290	66463	2	PLATE, SQG WHEEL NMT BUMPER		
13	86276710	70717	2	SCR, 5/16-18 X 2.0 CARRIAGE SS		
14	86083250	66459	1	PLATE, SQG TOP 33”		
15	86271870	57290	4	NUT, 1/4-20 HEX NYLOCK THIN SS		
16	86007040	70680	5	SCR, 5/16-18 X 1 THUMB SS TYPE P		
17	86271820	57270	5	NUT, 5/16-18 CAPTIVE "J" PLTD		
18	86087830	140760	1	STRAP, SQUEEGEE		
19A	86001630	140764	1	BLADE, SQU, FRONT 36.7		
19B	86283540	140938	1	BLADE, SQU, FRONT 36.7 URETHANE		
20	86083270	66461	1	PLATE, SQG VERICAL FILLER (F)		
21	86083260	66460	1	PLATE, SQG BOTTOM 33”		
22	86277000	70777	4	SCR, 1/4-20 X 1.5 CARRIAGE SS		
23	86276990	70776	2	SCR, 3/8-16 X 3.5 CARRIAGE SS		
24	86277450	70846	2	SCR, 3/8-16 X 2 LG CARRIAGE SS		
25	86008390	78493	1	TUBE ASM, SQUEEGEE VAC		
26	86083280	66462	1	PLATE, SQG VERTICAL FILLER		
27A	86001580	140763	1	BLADE, SQU, REAR 40.6 LINATEX		
27B	86283510	140935	1	BLADE, SQU, REAR 40.6 URETHANE		
28	86066440	140761	1	BAND, REAR SQUEEGEE		
29	86006400	67380	4	RIVET, 5/32 OF X 1/8 GRIP		
30	86009170	81488	1	LATCH, SQUEEGEE STRAP		
31	86009180	81489	1	STRIKER, SQUEEGEE STRAP REAR		
32	86066450	140762	1	BAND, SQG REAR RH		
33	86009910	82576	1	VIAL, LEVEL		
34	86274130	70098	2	SCR, 8-32 X 3/8 PHTC 'F' PLATD		
35	86071070	140795	1	BRKT, SQG QUICK CONNECT LOCK		
36	86071060	140794	1	BRKT, SQG QUICK CONNECT MTG		
37	86009200	81535	1	KNOB, 3/8-16 4 PRONG ALUM		
38	86277440	70845	1	SCR, 3/8-15 X 2.5 LG BSHCS SS		
39	86008660	80605	2	COTTER, 5/16 RING		
40	86277460	70847	1	SCR, 5/16-18 X 5/8 BSHCS SS		
-	86025170	47455	-	DISK SQUEGEE ASM		COMPLETE

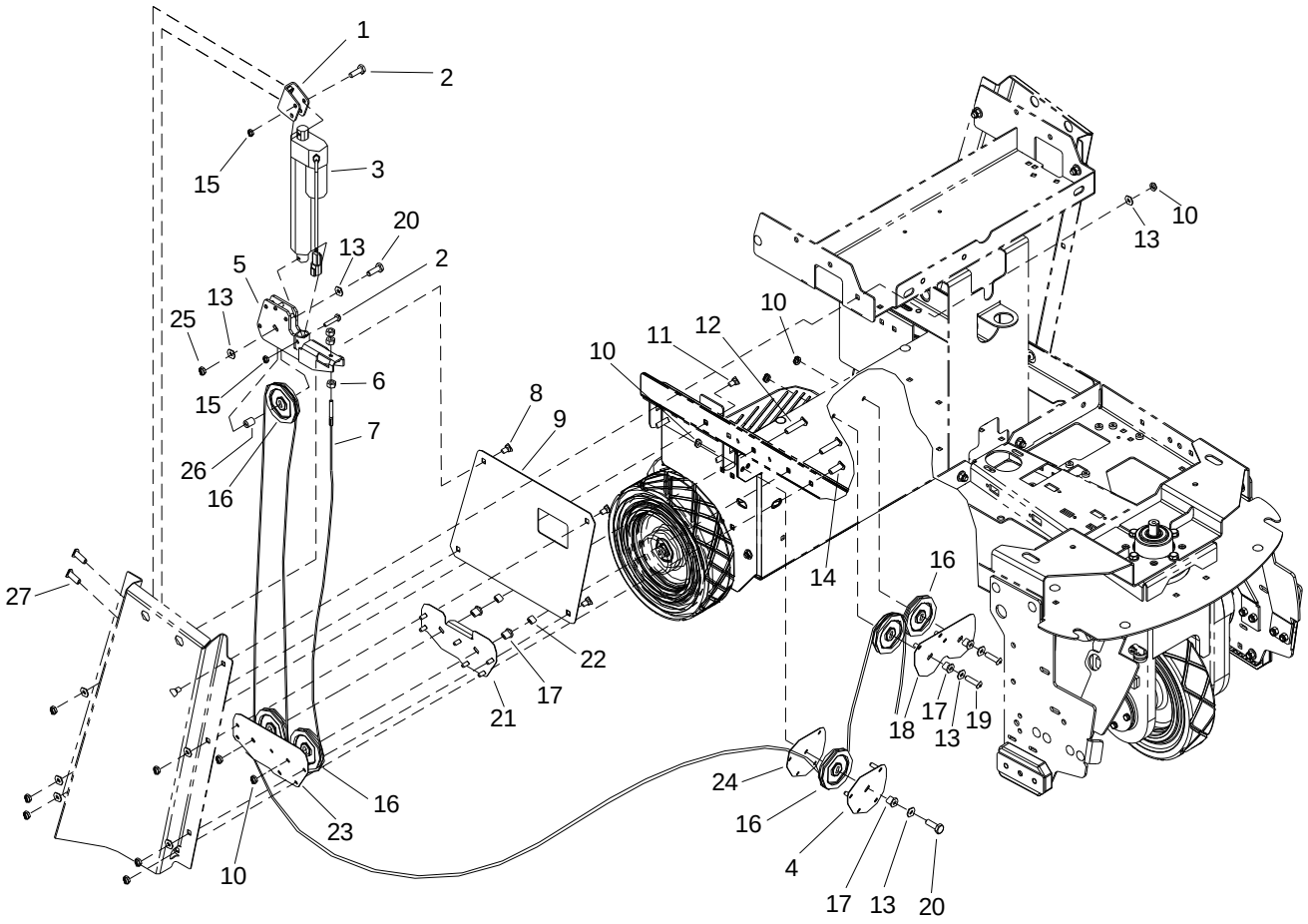
1
2
15
3
20
13
2
5
13
25
15
6
26
16
7
8
9
10
11
12
10
10
13
14
16
27
22
17
21
18
17
13
19
24
16
4
17
13
20
16
23
10

REF	PART NO.	PRV NO.	QTY	DESCRIPTION	SERIAL NO. FROM	NOTES
1	86068190	140793	1	BRACKET, ACTUATOR MOUNT	*(2)	WAS 86315270
2	86273820	70019	1	SCR, 1/4-20 X 1.25 HHCS		
3	86316550	-	1	ACTUATOR, 36VDC, 4.5:" STROKE		
4	86083490	66831	1	PLATE, PULLEY MOUNT, CORNER		
5	86068230	140840	1	BRACKET, SQG LIFT PULLEY MOUNT		
6	86270870	57029	3	NUT, 1/4-28 HEX SS		
7	86002780	270098	1	CABLE, SQUEEGEE LIFT DELUXE		
8	86277410	70840	4	SCR, 5/16-18 X 5/8 CARRIAGE SS		
9	86075430	270700	1	COVER, SQUEEGEE LIFT		
10	86270830	57023	9	NUT, 5/16-18 HEX NYLOCK SS		
11	86276070	70593	3	SCR, 5/16-18 X 3/4 CARRIAGE SS		
12	86277400	70839	2	SCR, 5/16-8 X 1.75 BSHCS SS		
13	86010670	87029	10	WASHER, 5/16 FLAT SS		
14	86277460	70847	1	SCR, 5/16-18 X 5/8 BSHCS SS		
15	86271870	57290	2	NUT, 1/4-20 HEX NYLOCK THIN SS		
16	86223370	66464	6	PULLEY, PLASTIC 3.0 DIA		
17	86231150	09151	5	BUSHING, FLANGE, .314ID X .502OD		
18	86083440	66824	1	PLATE, PULLEY MOUNTING, CENTER		
19	86276760	70724	2	SCR, 5/16-18 X 1.25 BSHCS SS		
20	86274720	70264	2	SCR, 5/16-18 X 1.50 HHCS SS		
21	86071300	140843	1	BRACKET, PULLEY RETAINER, DOUBLE		
22	86224290	730008	2	SPACER, .317ID X .5OD X .44 LG		
23	86071310	140844	1	BRKT, PULLEY RETAINER, DOUBLE		
24	86083500	66832	1	PLATE, PULLEY RETAINER, CORNER		
25	86271840	57285	1	NUT, 5/16-18 HEX NYLOCK THIN SS		
26	86228880	09132	1	BEARING, .314 ID X .503 OD X 1		
27	86277480	70850	2	SCR, 5/16-18 X 1/2 PTHMS SS		

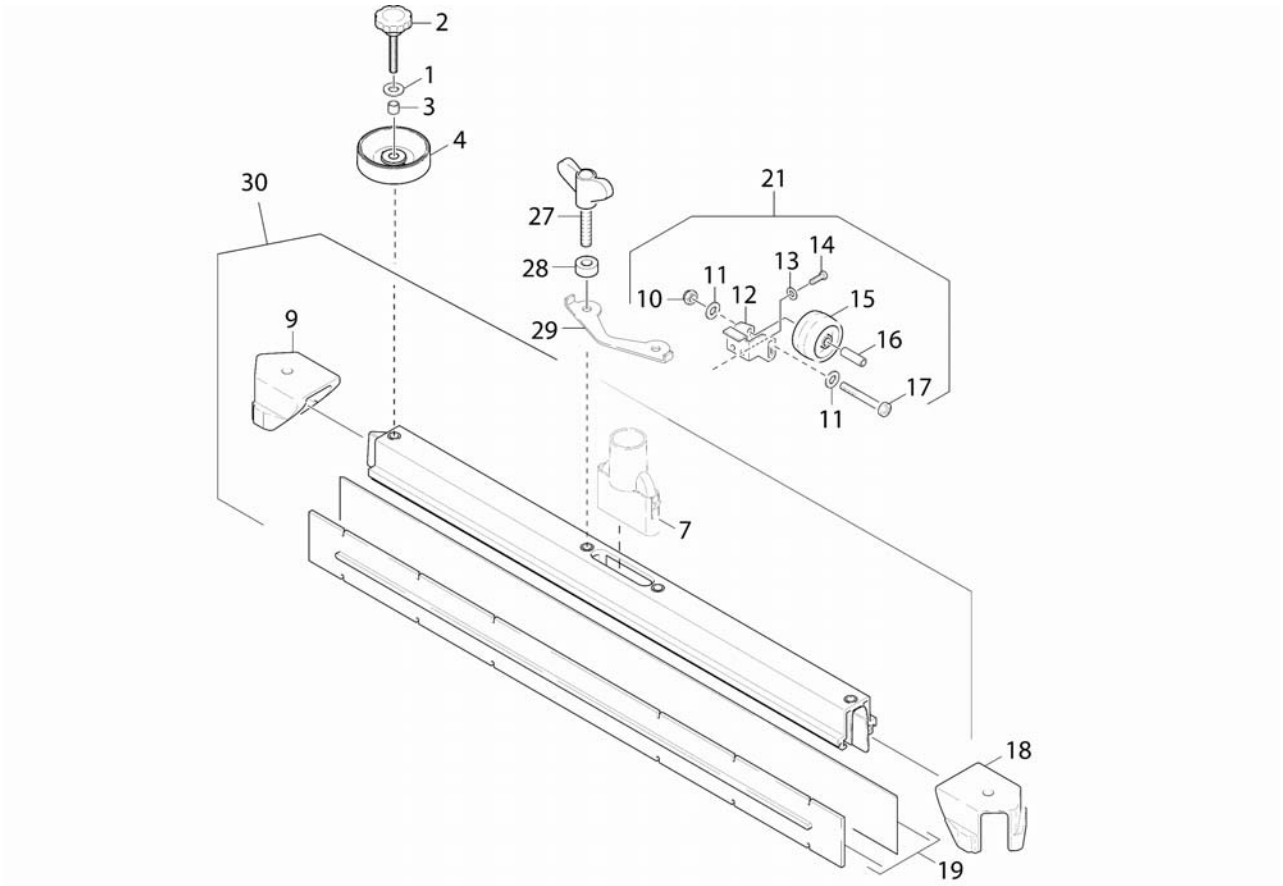
2
1
3
4
30
27
21
28
14
13
11
10
12
15
16
29
9
17
11
7
18
19

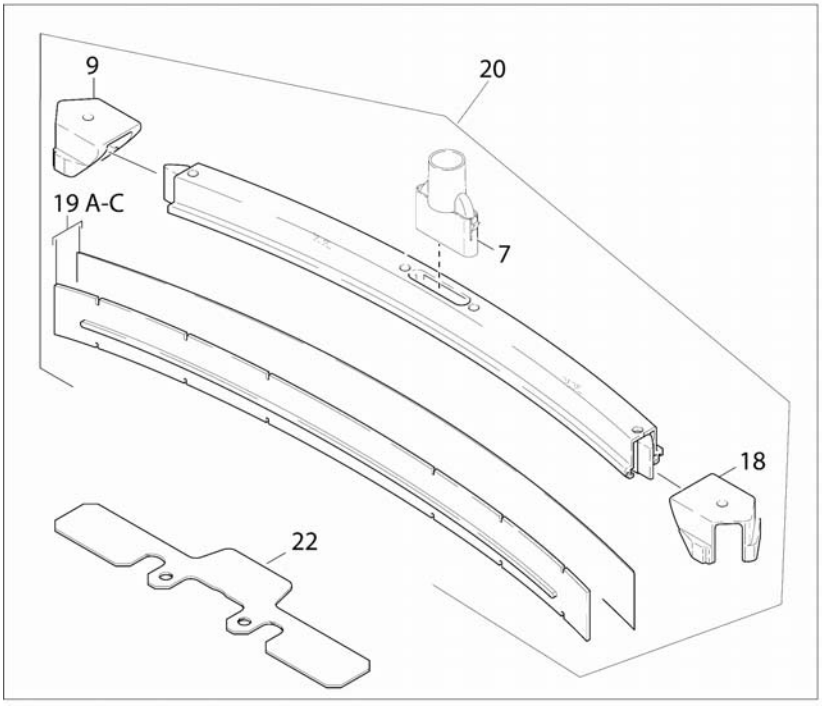
9
20
19 A-C
7
18
22

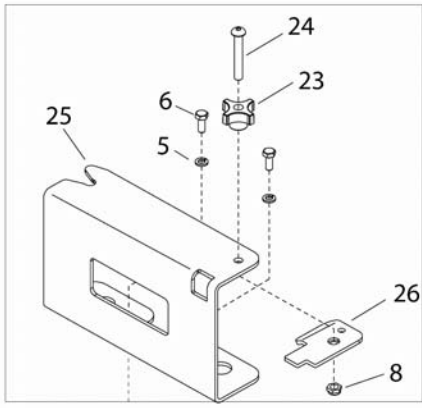
24
23
6
25
5
26
8

REF	PART NO.	PRV NO.	QTY	DESCRIPTION	SERIAL NO. FROM	NOTES
1	73120040	-	2	WASHER 8-00HV-A3E ISO 7090		
2	63212110	-	2	STAR GRIP VA		
3	50942310	-	2	SLEEVE SUCTION BAR IN VA		
4	55152670	-	2	DEFECTOR ROLL SUCTION BAR		
5	86137310	87098	2	WASHER, M8 SPLIT LOCK		
6	86274860	70311	2	SCR, M8X20 HHMS		
7	50319890	-	1	SUCTION NIPPLE		
8	86005630	57022	1	NUT, 3/8-16 HEX NYLOCK THIN SS		
9	50319910	-	1	END PIECE RIGHT		
10	73114220	-	2	HEXAGON NUT M6-14305 ISO 10511		
11	73120260	-	4	WASHER 6-A2 ISO 7090		
12	50443040	-	2	HOLDER ROLLER		
13	73120580	-	4	WASHER, 5-A2 ISO 7090		
14	73030370	-	4	SCREW M5X10-ST-P2R (IN6RD)		
15	64354010	-	2	WHEEL D54		
16	51052450	-	2	AXLE		
17	73045500	-	2	HEXAGONAL HEAD SCREW M 6X45-A4-70 ISO 4		
18	50319900	-	1	END PIECE LEFT		
19A	62732070	-	1	SQUEEGEE BLADE SET OIL RESISTAND (890MM)		
19B	62732130	-	1	SQUEEGEE BLADE SET STANDARD (890MM)		
19C	62732290	-	1	SQUEEGEE BLADE SET ANTI STRIPE OIL RESISTAND (890MM)		
20	47770590	-	1	SQUEEGEE BAR CURVED		
21	26395610	-	1	ADD-ON KIT SUPPORT WHEELS		
22	51283390	-	1	ADDITON WEIGHT		
23	86009200	81535	1	KNOB, 3/8-16 4 PRONG ALUM		
24	86277440	70845	1	SCR, 3/8-16 X 2.50 LG BSHCS SSS		
25	86314870	-	1	BRKT, SQUEEGEE MTG		
26	86071070	140795	1	BRKT, SQG QUICK CONNECT LOCK		
27	53052960	-	2	WING SCREW M8X40 VA	*(4)	
28	51128100	-	2	SLEEVE VA	*(4)	
29	50072170	-	1	PLATE	*(4)	
30	47773010	-	1	SUCTION BAR 850AB	*(4)	Complete

**Call Manufacturer for Serial Number

*See Serial Number Page

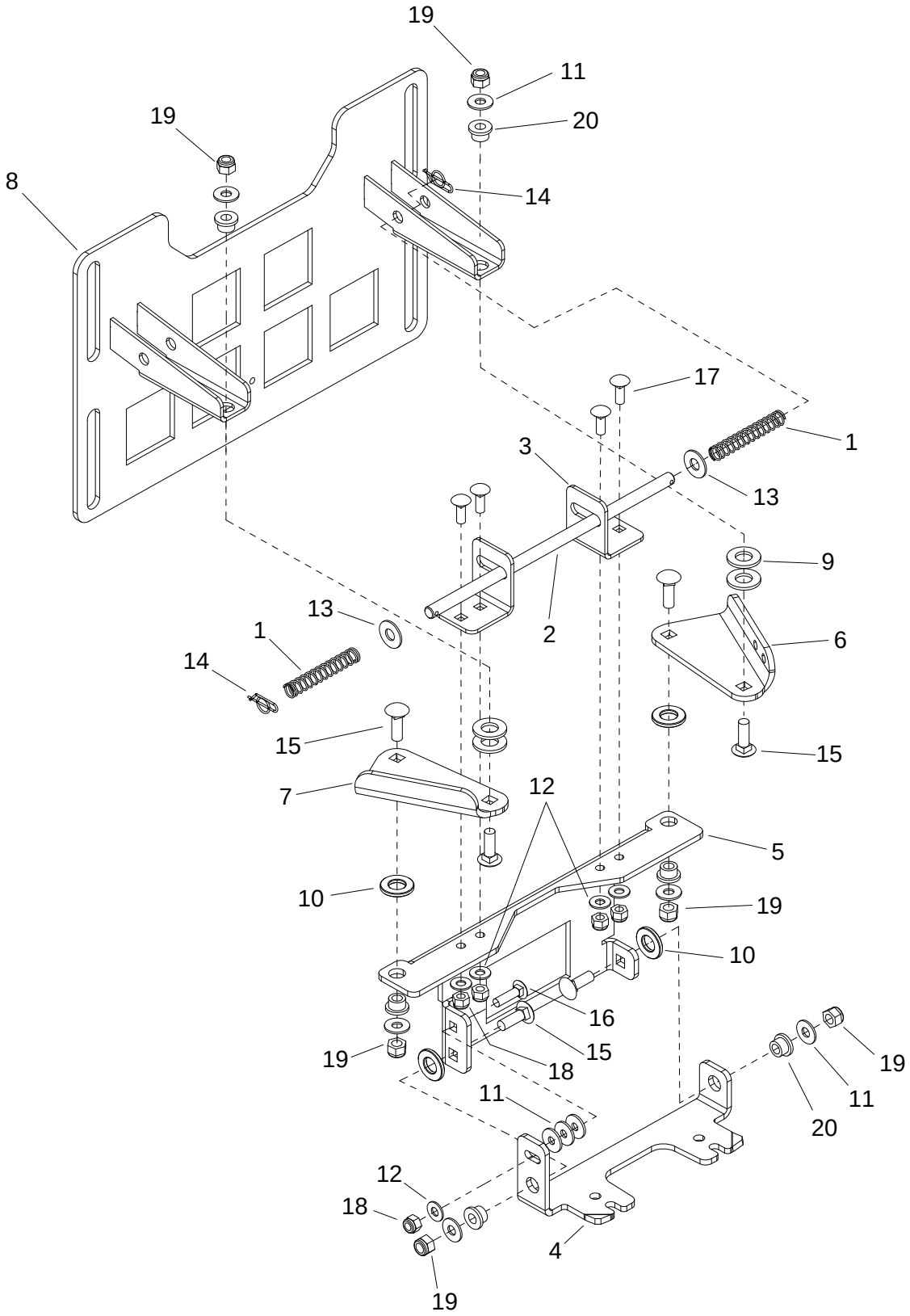
19
11
20
19
8
14
17
1
3
13
9
2
6
13
1
14
15
15
7
12
5
10
19
10
16
19
15
18
11
19
11
20
12
18
4
19

REF	PART NO.	PRV NO.	QTY	DESCRIPTION	SERIAL NO. FROM	NOTES
1	86334910	-	2	SPRING, COMP, .480OD X 2.75L		
2	86334760	-	1	SHAFT, SPRING		
3	86333860	-	2	BRACKET, SPRING		
4	86333590	-	1	BRACKET, MOUNT		
5	86333580	-	1	BRACKET, LINK, PIVOT		
6	86333570	-	1	BRACKET, LINK, LEFT		
7	86333560	-	1	BRACKET, LINK, RIGHT		
8	86333530	-	1	BRACKET, SQUEEGEE MOUNT		
9	86259420	87232	4	WASHER, THRUST.51 ID X 1 ODBRO		
10	86259400	87205	4	WASHER, THRUST .51 ID X 1 ODBRO		
11	86010670	87029	9	WASHER, 5/16 X 3/4 SS		
12	86010630	87013	5	WASHER, 1/4 X 5/8 FLAT SS		
13	86278910	87003	2	WASHER, 3/8 X 7/8 FLAT SS		
14	86005670	80606	2	COTTER, 3/8 RING		
15	86277130	70795	6	SCR, 5/16-18X1.00 CARRIAGE SS		
16	86276960	70773	1	SCR, 1/4-20 X 1.00 CARRIAGE SS		
17	86276950	70772	4	SCR, 1/4-20 X 3/4 CARRIAGE SS		
18	86005810	57245	5	NUT, 1/4-20 HEX NYLOCK SS		
19	86270830	57023	6	NUT, 5/16-18 HEX NYLOCK SS		
20	86228990	09153	6	BEARING FLG .314IDX.502OD		

* See serial number page.

**See Manufacturer for Serial Number.

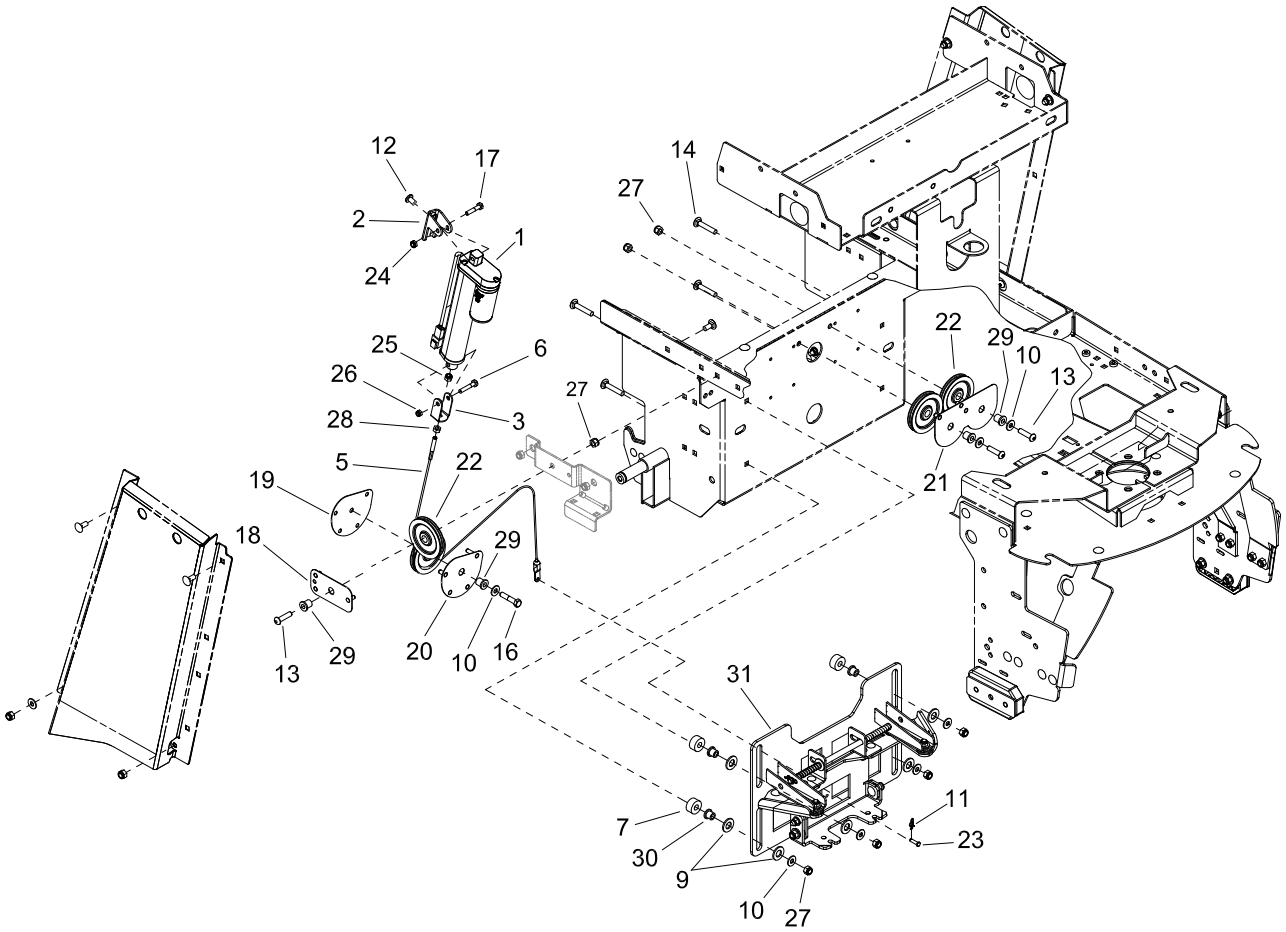
12
17
2
24
1
25
6
26
28
3
5
22
19
18
13
29
20
10
16
29
27
14
27
22
29
10
13
21
31
11
7
30
9
10
27
23

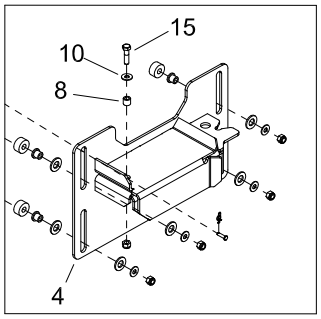
15
10
8
4

REF	PART NO.	PRV NO.	QTY	DESCRIPTION	SERIAL NO. FROM	NOTES
1	86320800	-	1	ACTUATOR, 36VDC, 3.0", LONG		
2	86315270	-	1	BRKT ASSY, ACTUATOR MOUNT		
3	86315250	-	1	YOKE, CABLE		
4	86315000	-	1	SQUEEGEE MOUNT ASSY		
5	86314820	-	1	CABLE ASSY, SQUEEGEE		
6	86273740	70010	1	SCR, 1/4-20 X 1.5 HHCS SS		
7	86224370	730335	4	SPACER, 1 OD X .391 ID X .500		
8	86224290	730008	1	SPACER, .317ID X .5OD X .44LG		
9	86259420	87232	8	WASHER, THRUST.51 ID X 1 ODBRO		
10	86010670	87029	8	WASHER, 5/16 X 3/4 SS		
11	86008650	80604	1	COTTER, 1/4 RING		
12	86277480	70850	1	SCR, 5/16-18X1/2 PTHMS SS		
13	86276760	70724	3	SCR, 5/16-18 X 1.25 BSHCS SS		
14	86276690	70715	4	SCR, 5/16-18 X 1.75 CARR SS		
15	86007020	70673	1	SCR, 5/16-18 X 1.25 HHCS SS		
16	86274720	70264	1	SCR, 5/16-18 X 1.50 HHCS SS		
17	86273820	70019	1	SCR, 1/4-20 X 1.25 HHCS SS		
18	86073600	66833	1	BRKT, PULLEY RETAINER, SINGLE		
19	86083500	66832	1	PLATE, PULLEY RETAINER, CORNER		
20	86083490	66831	1	PLATE, PULLEY MOUNT, CORNER		
21	86083440	66824	1	PLATE, PULLEY MOUNTING, CENTER		
22	86223370	66464	4	PULLEY,PLASTIC 3.0 DIA		
23	86272470	66270	1	PIN, CLEVIS 3/16 X .75 PLTD		
24	86271870	57290	1	NUT, 1/4-20 HEX NYLOCK THIN SS		
25	86005810	57245	1	NUT, 1/4-20 HEX NYLOCK SS		
26	86270990	57090	1	NUT, 10-32 HEX NYLOCK SS		
27	86270830	57023	9	NUT, 5/16-18 HEX NYLOCK SS		
28	86270770	57006	1	NUT, 1/4-20 HEX		
29	86231150	09151	4	BEARING FLANGED .314IDX.502OD		
30	86228840	09124	4	BEARING, FLANGED .313IDX.502OD		
31	86334490	-	1	ASM, LIFT, SQUEEGEE	*(4)	

*See serial number page.

**See Manufacturer for Serial Number.

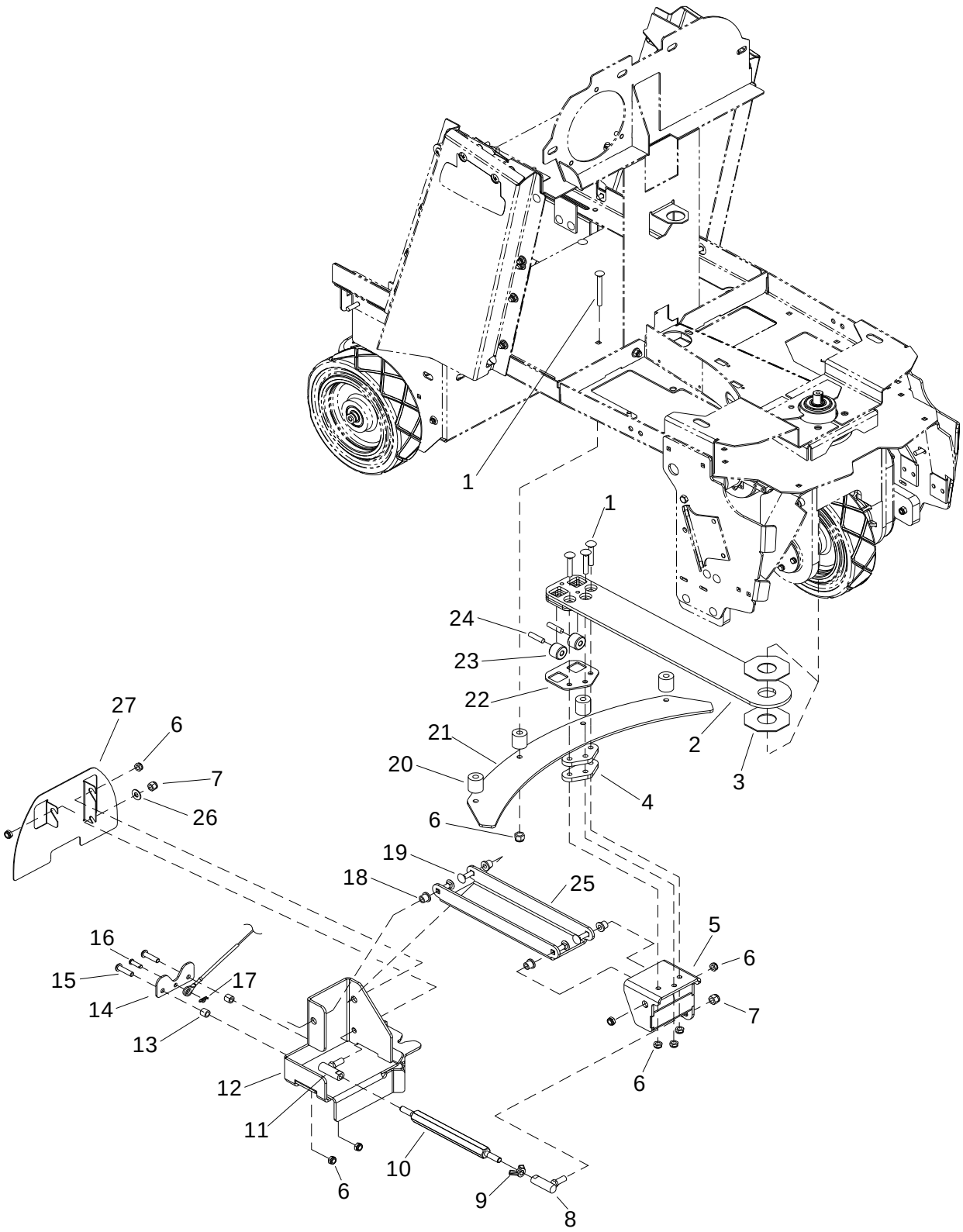
1
1
24
23
22
21
20
6
2
3
4
27
6
7
26
19
18
25
5
6
7
6
16
15
14
13
17
12
11
10
6
9
8

REF	PART NO.	PRV NO.	QTY	DESCRIPTION	SERIAL NO. FROM	NOTES
1	86276690	70715	7	SCR, 5/16-18 X 1.75 CARR SS		
2	86091530	140787	1	BRACKET, SQUEEGEE SIDE PIVOT		
3	86090300	87247	2	WASHER, 1.25 ID X .075 OCTAGON		
4	86083370	66475	2	PLATE, SQG SWING SPACER		
5	86091540	140800	1	BRACKET, H PIVOT MOUNT		
6	86270830	57023	13	NUT, 5/16-18 HEX NYLOCK SS		
7	86271530	57216	2	NUT, 3/8-24 HEX NYLOCK		
8	86008810	80697	1	BALL JOINT ASY, 3/8-24 RH		
9	86271980	57303	1	NUT, 3/8-24 WING SS		
10	86223590	67510	1	ROD, CAMBER ADJUST		
11	86001320	140353	1	BALL JOINT ASSY, 3/8-24 LH		
12	86091810	140798	1	BRKT, SQG QUICK CONNECT		
13	86224290	730008	2	SPACER, .317ID X .500 X .44LG		
14	86083400	66479	1	PLATE, CABLE RETAINING		
15	86276760	70724	2	SCR, 5/16-18 X 1.25 BSHCS SS		
16	86272630	80771	1	PIN, CLEVIS 1/4 X .88 PLTD		
17	86008650	80604	1	COTTER, 1/4 RING		
18	86228840	09124	4	BEARING, FLANGED .314 ID X .502 0D		
19	86277030	70780	4	SCR, 5/16-18 X 1.25 CARRIAGE SS		
20	86224380	730336	4	SPACER, 1 OD X .343 ID X 1.063		
21	86083150	66446	2	PLATE, SQUEEGEE SWING		
22	86083310	66468	1	PLATE, WHEEL RETAINER		
23	86226030	89268	2	WHEEL, 1.000 OD X .323 ID X .750 SS		
24	86222580	66466	2	PIN, .312 DIA X 1.250 LG SS		
25	86070820	140740	1	BRKT, SQUEEGEE SWING HORIZ		
26	86278910	-	1	WASHER, 3/8ID X 7/8OD SS	*(1)	
27	86326670	-	1	PLATE, CABLE GUARD	*(1)	

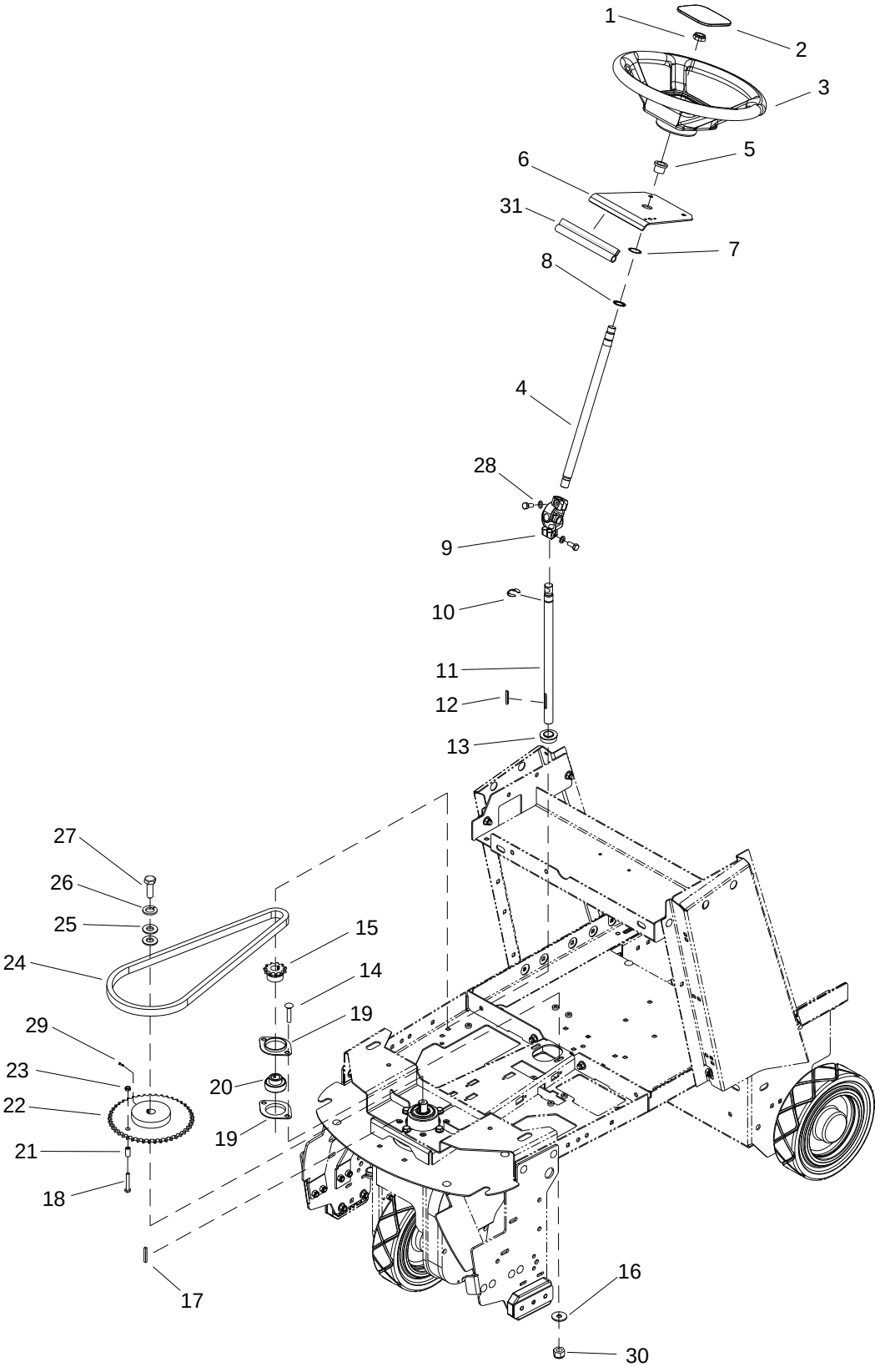
1
2
3
5
6
31
7
8
4
28
9
10
11
12
13
27
26
25
24
15
14
19
29
23
22
20
19
21
18
17
16
30

REF	PART NO.	PRV NO.	QTY	DESCRIPTION	SERIAL NO. FROM	NOTES:
1	86271610	57228	1	NUT, 5/8-16 HEX NYLOCK THN		
2	86234810	27945	1	COVER, STEERING WHEEL		
3	86259610	730117	1	WHEEL, STEERING 40 SPLINE HUB		**INCLUDES 27945**
4	86224050	730318	1	SHAFT, UPPER STEERING		
5	86228790	09111	1	BEARING, FLANGE .88ODX.75IDX.75		
6	86314830	-	2	BRKT, UPPER STEERING SUPPORT		
7	86005610	57016	1	NUT, 7/8 DIA PUSHLOCK		
8	86317090	-	1	RING, EXT PUSH ON RTNR, 3/4		
9	86219600	45012	1	JOINT, UNIVERSAL FEMALE		
10	86272900	67416	1	RING, 3/4" KLIP		
11	86224060	730319	1	SHAFT, LOWER STEERING		
12	86219650	48110	1	KEY, 5MM SQ X 39MM L		
13	86228670	09072	1	BEARING, 3/4" BORE FLANGED		
14	86276070	70593	2	SCR, 5/16-18 X 3/4 CARRIAGE SS		
15	86224800	730315	1	SPROCKET, STEERING SHAFT		
16	86010670	87029	2	WASHER, 5/16 FLAT SS		
17	86135970	48045	1	KEY, 3/16 SQ X 5/8 LONG		
18	86275190	70377	1	SCR, 3/8-16 X 1.25 HHCS SS		
19	86008610	80595	2	FLANGE, BEARING PRESS STEEL		
20	86001030	09148	1	BEARING, BALL 3/4 BORE SPHERED		
21	86224320	730221	1	SPACER, .63 OD X .385ID X .64L		
22	86224810	730316	1	SPROCKET, DRIVE WHEEL STEERING		
23	86005630	57022	1	NUT, 3/8-16 HEX NYLOCK THIN SS		
24	86002750	270088	1	CHAIN, ISO 08B, 12.7MM PITCH		
25	86278940	87008	2	WASHER, 1/4 ID X 1-1/4OD		
26	86010780	87162	1	WASHER, 1/4 SPLIT LOCK PLTD		
27	86274330	70175	1	SCR, M6 X 20HHMS PLTD		
28	86279130	87083	2	WASHER, 5/16 SPLIT LOCK		
29	86253200	70806	1	SET SCR, M6 X 25 NP		
30	86270830	57023	2	NUT, 5/16-18 HEX NYLOCK SS		
31	86321430	-	1	TRIM, SEAL, 5/8" BULB X 6.8**"**		
-	86232780	279001	-	CHAIN, MASTERLINK 12.7MM		

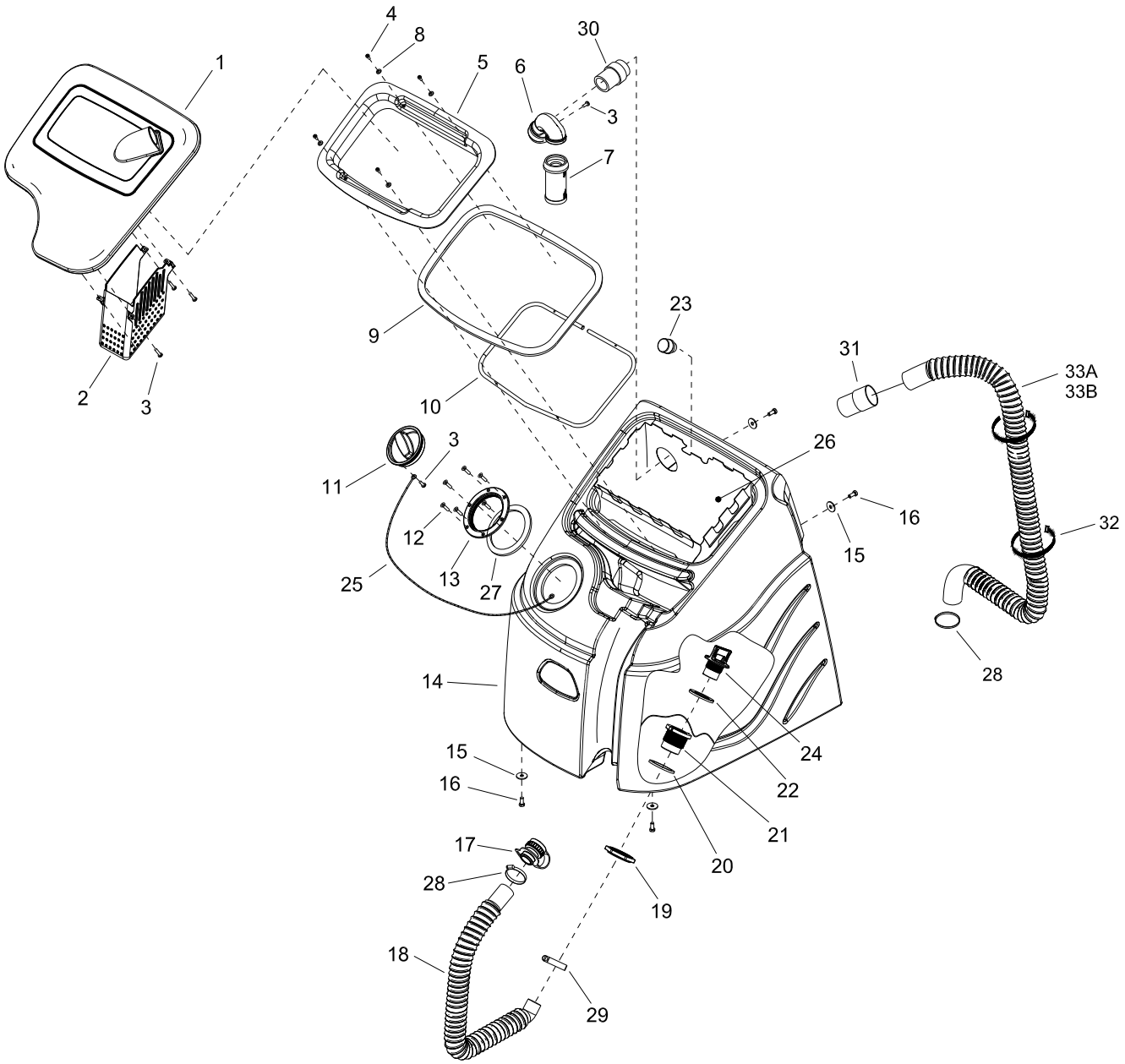
1
2
3
4
8
5
6
30
3
7
9
10
23
31
33A
33B
26
3
11
12
13
27
25
16
15
32
28
14
15
16
17
28
18
29
19
20
21
22
24

REF	PART NO.	PRV NO.	QTY	DESCRIPTION	SERIAL NO. FROM	NOTES
1	86313100	-	1	DOME, TANK, 20 X 21		
2	86310190	-	1	BASKET, STRAINER, DOME		
3	86327510	-	6	SCR, KA50 X 16, WN1412 A2 SS		
4	86290540	-	4	SCR, 10-32 X 1/2 TORX SS BLK NP		
5	86315530	-	1	COLLAR, BAG		
6	86025200	31377	1	ELBOW ASM, FLOAT		
7	86199840	090-12A	1	FLOAT SCREEN CAGE ASSY (SLIP)		
8	86294250	-	4	WASHER, .19ID X .5 X .09 THK BLK		
9	86317770	-	1	GASKET, DOME		
10	86315550	-	1	FRAME, BAG		
11	86314160	-	1	FILL PORT LID		
12	86275800	70546	6	SCREW 8 X3/4 PFHT/S BLK ZINC		
13	86317620	-	1	RIM FILL PORT 4"BLACK W/O-RING		
14	86312050	-	1	TANK, BLUE TRIM		
15	86279630	87212	4	WASHER, .344IDX1.13ODX.09T PLT		
16	86276490	70670	4	SCR, 5/16-18 X 5/8 HHCS GR5		
17	86004440	39717	1	CAP, DRAIN HOSE		
18	86315500	-	1	HOSE, 2 X 30 DRAIN		
19	86314080	-	1	NUT, DRAIN FITTING		
20	86317360	-	1	GASKET, TANK DRAIN		
21	86314070	-	1	FITTING, DRAIN		
22	86317370	-	1	GASKET ASSY, DRAIN PLUG		
23	86256100	730333	1	STRAINER, 3/4-MPT, 12 MESH		
24	86314050	-	1	PLUG, DRAIN		
25	86246080	51368	1	LANYARD, 18.0 W/LOOP & EYE		
26	86312800	-	1	BAG RECOVERY		
27	86317610	-	1	GASKET, 5.5 OD X4.5ID X.06W/PSA		
28	86002390	20063	1	CLAMP, 1.75” WORM GEAR X .312”		
29	86002380	20046	1	CLAMP, 2.25 WORM GEAR		
30	86033570	78934	1	TUBE ASM		
31	86003010	27759	1	CUFF, HOSE 1.5" BLK A 2161		
32	86264950	27746	2	CABLE TIE, .19W X 11.5 L BLK		
33A	86305960	-	1	HOSE ASM, 1.5 BLK PVC VAC X 67		DISK
33B	86318090	-	1	HOSE ASM, W/90 DEGREE METRIC		CYLINDRICAL

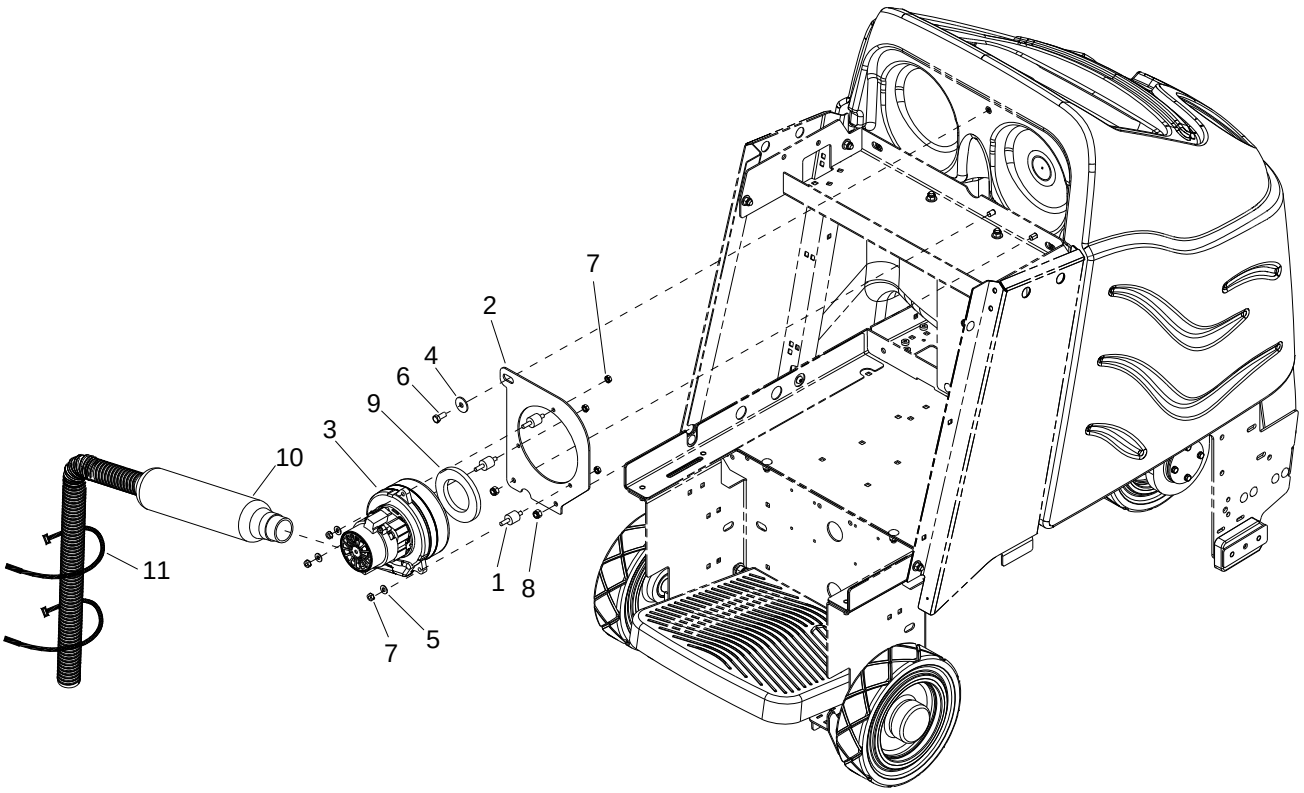
7
2
4
6
9
3
10
11
1
8
7
5

REF	PART NO.	PRV NO.	QTY	DESCRIPTION	SERIAL NO. FROM	NOTES
1	86314790	-	3	ISOLATOR, RUBBER, 1/4-20 UNC M		
2	86314780	-	1	PLATE, VAC MOTOR		
3	86012210	-	1	VAC MOTOR, 36VDC 2ST TD		
4	86279630	87212	1	WASHER, .344IDX1.130ODX.09T PLT		
5	86010630	87013	3	WASHER, 1/4 X 5/8 FLAT SS		
6	86276490	70670	1	SCR, 5/16-18 X 5/8 HHCS GR5		
7	86005710	57105	6	NUT, 1/4-20 HEX W/STAR		
8	86270830	57023	2	NUT, 5/16-18 HEX NYLOCK SS		
9	86237440	35168	1	GASKET, 4.06 X 2.50 X .38		
10	86318080	-	1	MUFFLER ASSY, 1.5 HOSE		
11	86264950	27746	2	CABLE TIE, .19W X 11.5L BLK		

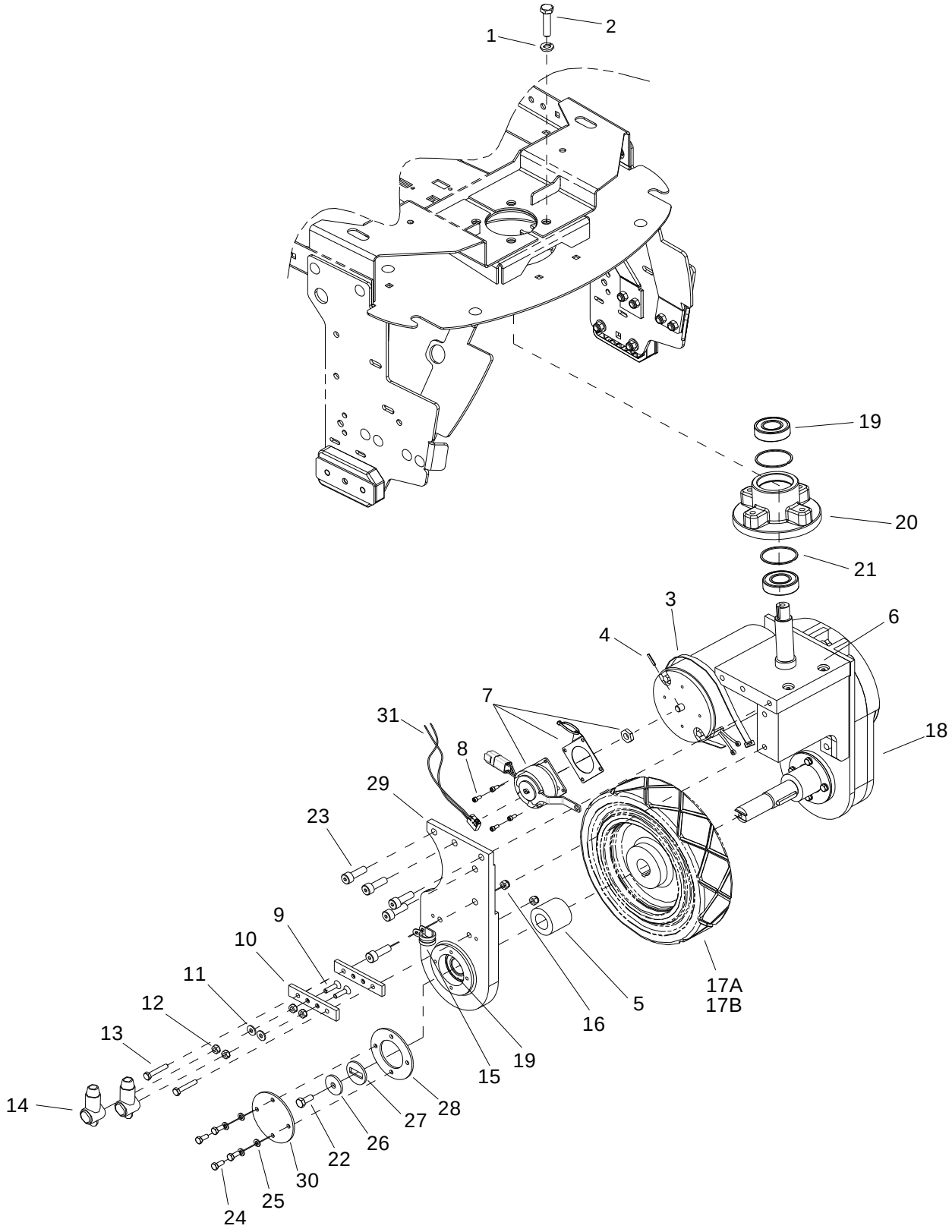
1
2
19
20
21
3
4
6
7
31
8
18
29
23
9
10
11
12
13
14
5
16
17A
17B
15
19
27
28
26
22
30
25
24

REF	PART NO.	PRV NO.	QTY	DESCRIPTION	SERIAL NO. FROM	NOTES
1	86275190	70377	4	SCR, 3/8-16 X 1.25 HHCS SS		
2	86010790	87163	4	WASHER, 3/8 SPLIT LOCK PLTD		
3	86002830	27196	1	CABLE TIE, .375 X 24.7		
4	86006170	66031	1	PIN, ROLL 1/8" X 3/4"L		
5	86224440	730387	1	SPACER, 25.51 ID X 45 OD X 39.1 L		
6	86224020	730233	1	SHAFT ASM, DRIVE PIVOT		
7	86001740	140816	1	BRAKE, 36VDC W/CONNECTOR		
8	86273340	00-000289	4	SCR, CAP 8-32 X 3/8 SHCS SS		
9	86006840	70390	2	SCR, 1/4-20 X 1 FHCS PLTD		
10	86257490	76155	2	TERMINAL MOUNT		
11	86010630	87013	2	WASHER, 1/4 ID X 5/8 OD SS		
12	86005710	57105	4	NUT, 1/4-20 HEX W/STAR WASHER		
13	86273740	70010	2	SCR, 1/4-20 X 1.5 HHCS		
14	86008920	80889	2	BOOT, RUBBER TERM. ISOLATOR		
15	86233410	81270	1	CLAMP, 3/4 IDA CUSHION .406 DIA		
16	86005810	57245	2	NUT, 1/4-20 HEX NYLOCK SS		
17A	86333890	-	1	WHEEL, 10 X 2, COMPOSITE, W/ KEYWAY		
17B	86259920	89273	1	WHEEL, 10 X 2. 5 W/KEYWAY, GRY		OPTIONAL
18	86317190	-	1	GEAR BOX DRIVE UNIT HELICAL		
19	86223980	09134	3	SEALED BALL BRNG, 25MM X 52MM		
20	86219420	41510	1	HUB STEERING		
21	86223480	67450	2	RING, 52MM INTERNAL SNAP		
22	86136640	70262	1	SCR, M8-1.25 X 20 HHMS PLTD		
23	86318830	-	10	SCR, M10 X 30 SHCS		
24	86277340	70830	4	SCR, M6 X 15 HHCS BLK		
25	86279690	87243	4	WASHER, M6 SPLIT LOCK BLK		
26	86279710	87245	1	WASHER, M8 (2THK X 26 OD)		
27	86225810	87506	1	WASHER, ANTI-ROTATION		
28	86222720	620037	1	PLATE, BEARING RETAINER		
29	86222760	620041	1	PLATE, DRIVE YOKE RH		
30	86222770	620042	1	PLATE, BEARING COVER		
31	86320870	-	1	SWITCH, BRAKE 36V		
-	86317200	-	1	DRIVE MOTOR ASSEMBLY HELICAL		COMPLETE
-	86216210	53820	-	BRUSH SET MOTOR, 53810 86005510		

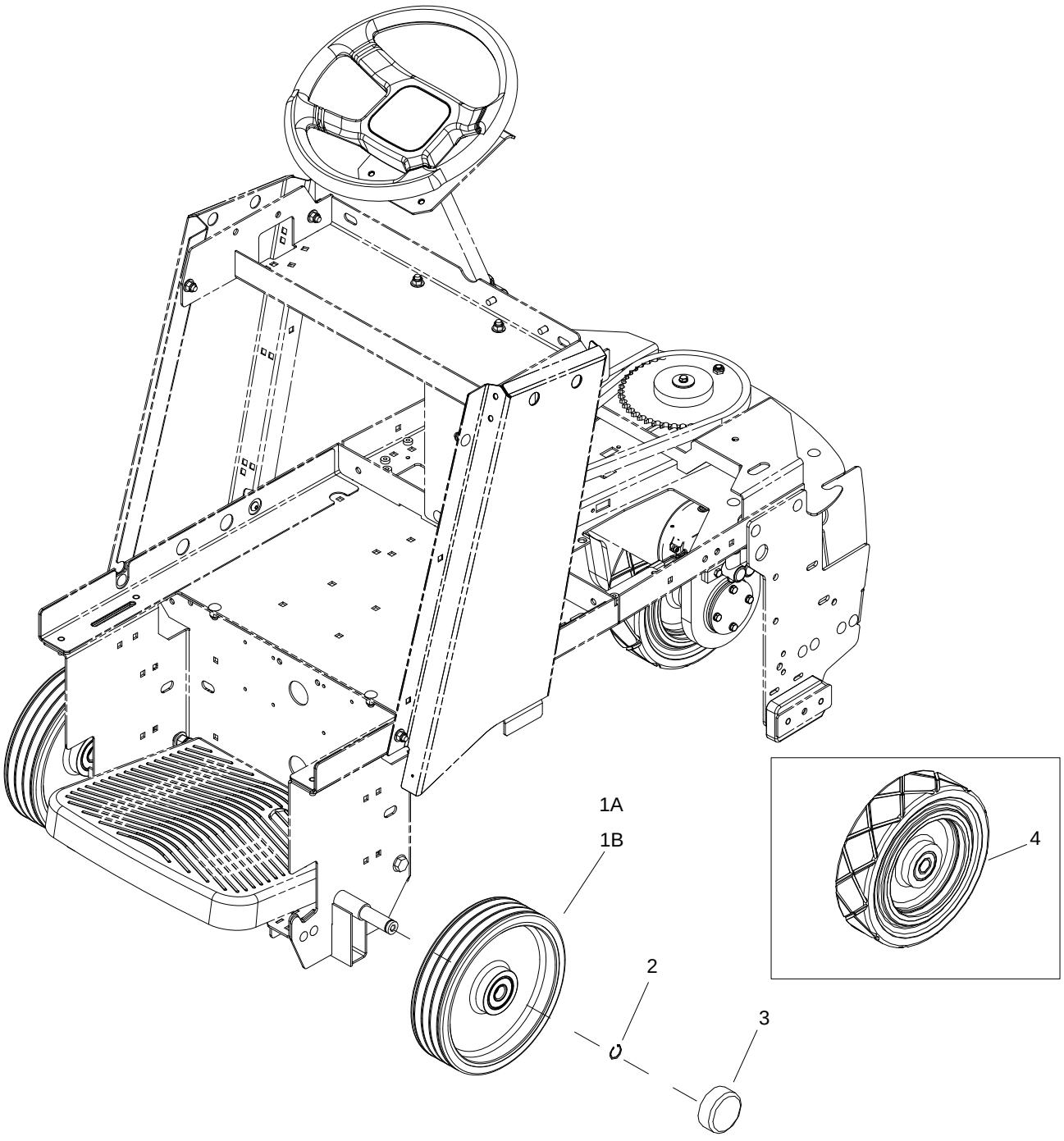
1A
1B
2
3
4

REF	PART NO.	PRV NO.	QTY	DESCRIPTION	SERIAL NO. FROM	NOTES
1A	86335520	-	2	WHEEL, 10 X 2, PLSTC HUB, W/ BEARINGS	**	
1B	86259930	89274	-	WHEEL, 10X2.5, W/BEARINGS, GRY		OPTIONAL
2	86008710	80623	2	RING, ¾" EXT SNAP H-D		
3	86232130	17309	2	CAP, 2.75 ID X 1.0 L BLK VINYL		
4	86011110	89261	2	WHEEL, 10X2.5X.787ID BEARINGS		

*SEE SERIAL NUMBER PAGE

**CALL MANUFACTURER FOR SERIAL NUMBER

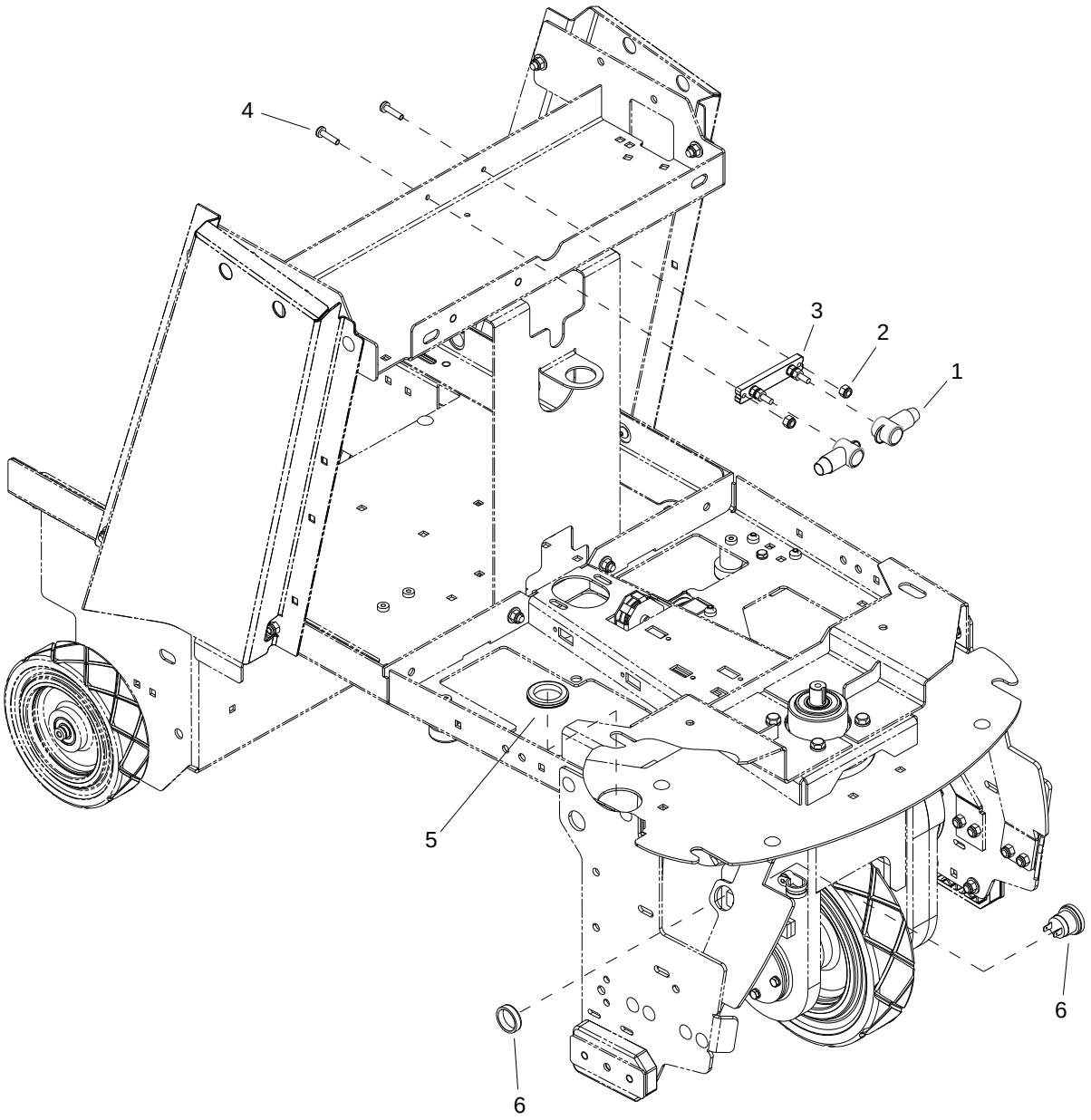
4
3
2
1
5
6
6

REF	PART NO.	PRV NO.	QTY	DESCRIPTION	SERIAL NO. FROM	NOTES
1	86008920	80889	2	BOOT, RUBBER TERM. ISOLATOR		
2	86270830	57023	2	NUT, 5/16-18 HEX NYLOCK SS		
3	86229770	140805	1	BLOCK, SHUNT MOUNT		
4	86273980	70066	2	SCR, 10-32 X 3/4 PPHMS		
5	86238500	81427	1	GROMMET, 1.703 ID X 2.5 OD X .125 GRV		
6	86239720	41520	1	HORN, 108 DB MINATURE W/RING		

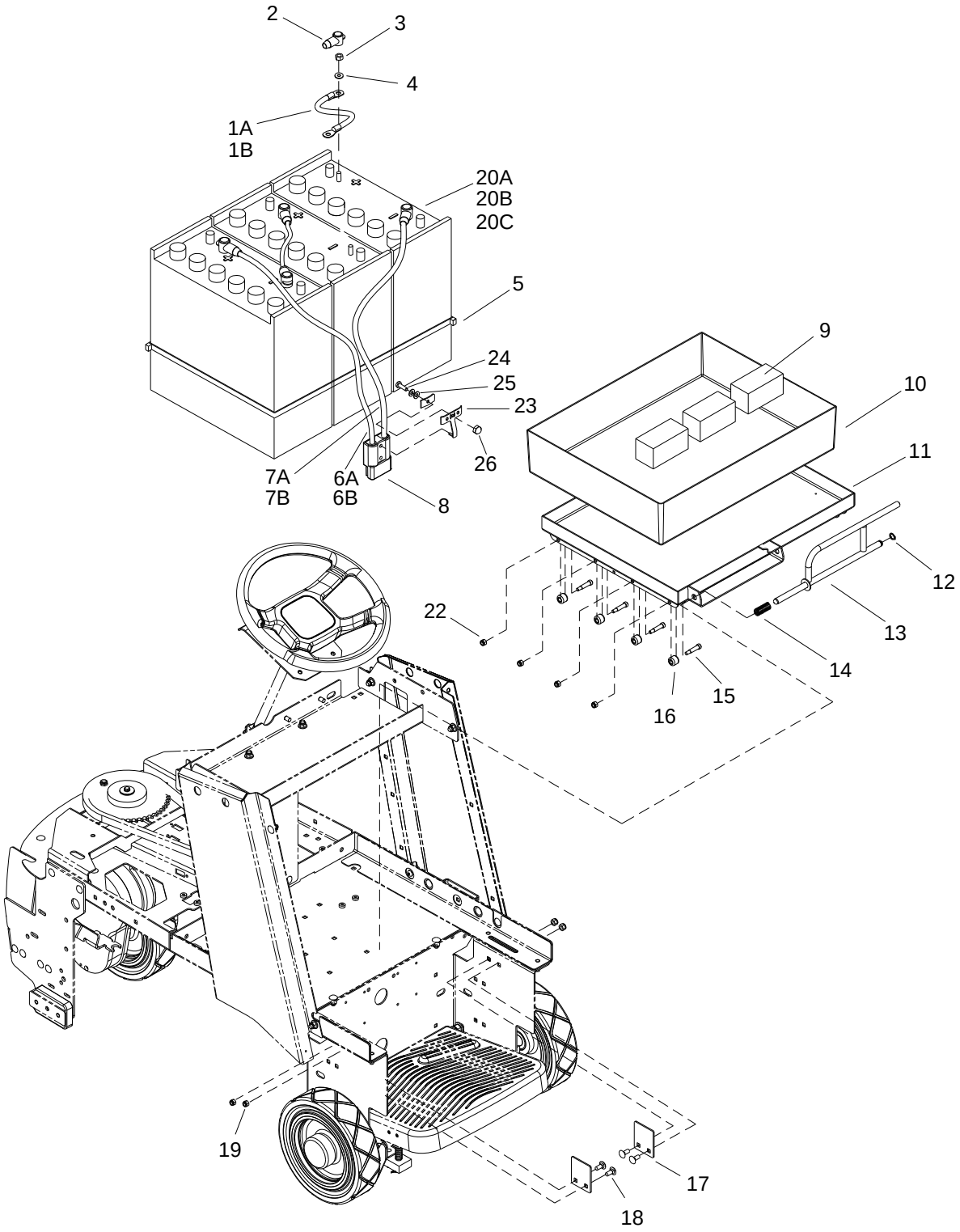
2
3
4
1A
1B
20A
20B
20C
5
24
25
23
26
7A
7B
6A
6B
8
9
10
11
12
13
14
15
16
22
19
17
18

REF	PART NO.	PRV NO.	QTY	DESCRIPTION	SERIAL NO. FROM	NOTES
1A	86260200	80872	2	WIRE, 4X14.5BK 3/8RINGX3/8RING		
1B	86002510	23125	2	CABLE ASM, BAT. JUMPER X 15		EURO
2	86008920	80889	6	BOOT, RUBBER TERM. ISOLATOR		
3	86271910	57295	6	NUT, 5/16-18 FLEXLOCK		
4	86010670	87029	6	WASHER, 5/16 FLAT SS		
5	86264960	27915	2	CABLE TIE, .375 X 43		
6A	86260610	880836	1	WIRE, 4X25RD CTERM X 3/8RING		
6B	86002570	23190	1	WIRE, 4X27 RD BCLAMP X CTERM		EURO
7A	86260230	80876	1	WIRE, 4X30 BK CTERM X 3/8RING		
7B	86002580	23191	1	WIRE, 4X27 BK BCLAMP X CTERM		EURO
8	86008760	80682	1	CONN, 175 DCA GRY W/O TERMS		
9	86229700	08071	3	BLOCK, 3.0 X 1.5 X 1.5		
10	86008300	78242	1	TRAY, BATTERY LINER		
11	86008410	78568	1	TRAY, BATTERY		
12	86272810	67132	1	RING, 1/2 EXT. SNAP H-D		
13	86092910	51396	1	LATCH ROD, BATTERY TRAY		
14	86254990	730313	1	SPRING, COMP, 63ODX3.5LX.047W		
15	86278150	70117	8	SHOULDER BOLT, 5/16 OD X 1.0 L		
16	86259910	89265	8	WHEEL, BATTERY TRAY		
17	86088790	78571	2	TRAY, STANDARD STOP		
18	86276070	70593	4	SCR, 5/16-18 X 3/4 CARRIAGE SS		
19	86270830	57023	4	NUT, 5/16-18 HEX NYLOCK SS		
20A	86228410	10023	3	BATTERY, 12V, 205AH		
20B	86283410	10030	3	BATTERY, 12V, 225AH		
20C	86228430	10032	3	BATTERY, 12V, AGM 198AH		
21A	86284090	02456	1	CHARGER, 36V, 20A, 115V, C175		♦
21B	86000150	02264	1	CHARGER, 36VDC/21A AGM		♦
22	86005810	57245	8	NUT, 1/4-20 HEX NYLOCK SS		
23	86233360	28038	1	CLAMP, CABLE KIT SY945		
24	86273980	70066	1	SCREW, 10-32 X 3/4 PPHMS SS		
25	86010650	87018	1	WASHER, #10 X 9/16 OD		
26	86270890	57034	1	NUT, ACORN 10-32		

♦ NOT SHOWN-FOR WET CELL BATTERIES AND AGM BATTERIES

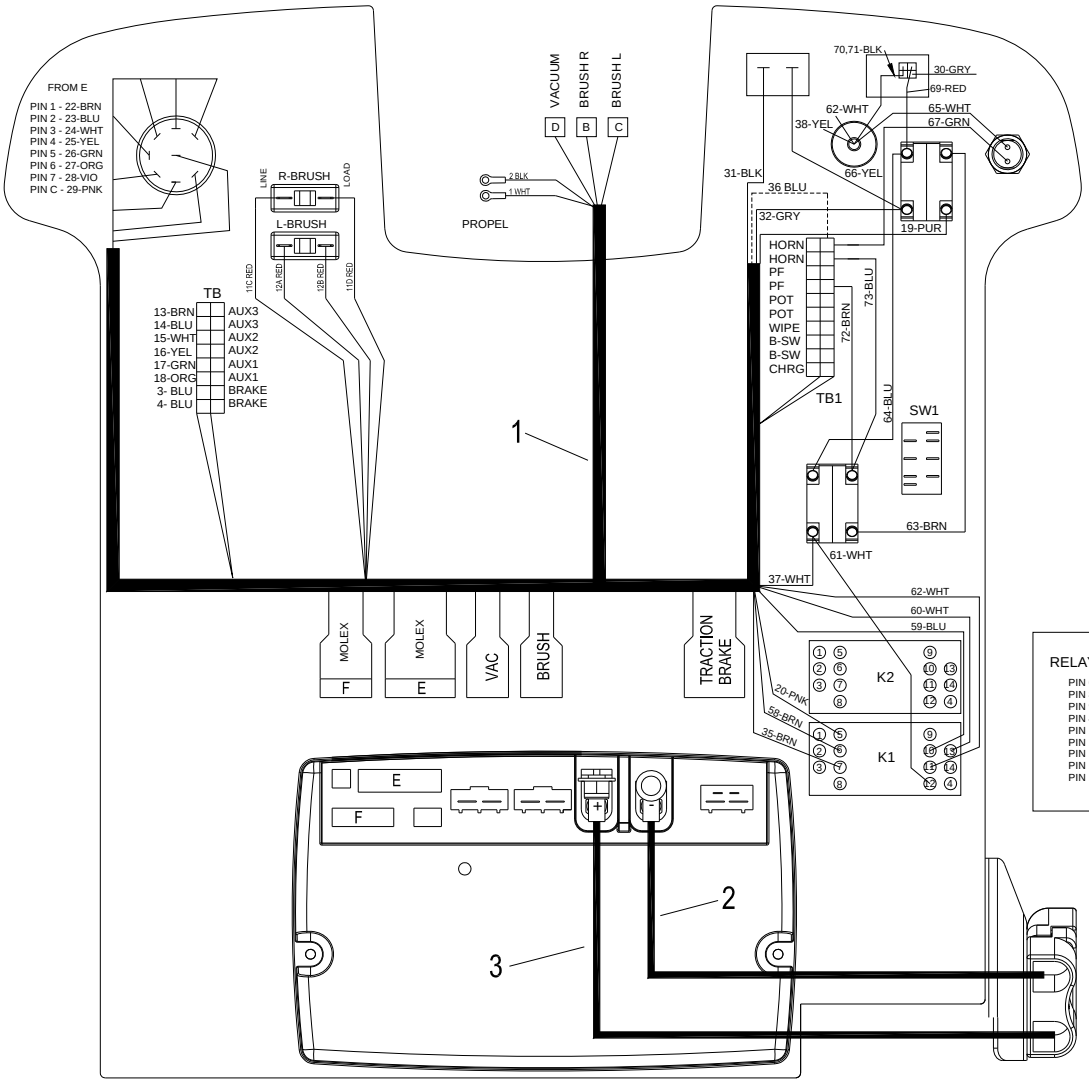
FROM E
PIN 1 - 22-BRN
PIN 2 - 23-BLU
PIN 3 - 24-WHT
PIN 4 - 25-YEL
PIN 5 - 26-GRN
PIN 6 - 27-ORG
PIN 7 - 28-VIO
PIN C - 29-PNK
R-BRUSH
L-BRUSH
LINE
LOAD
11C RED
12A RED
12B RED
11D RED
TB
13-BRN AUX3
14-BLU AUX3
15-WHT AUX2
16-YEL AUX2
17-GRN AUX1
18-ORG AUX1
3- BLU BRAKE
4- BLU BRAKE
VACUUM
BRUSH R
BRUSH L
D
B
C
2 BLK
1 WHT
PROPEL
70,71-BLK
30-GRY
69-RED
62-WHT
38-YEL
65-WHT
67-GRN
66-YEL
31-BLK
36 BLU
32-GRY
19-PUR
HORN
HORN
PF
PF
POT
POT
WIPE
B-SW
B-SW
CHRG
72-BRN
73-BLU
TB1
64-BLU
SW1
63-BRN
61-WHT
37-WHT
62-WHT
60-WHT
59-BLU
MOLEX
MOLEX
VAC
BRUSH
TRACTION
BRAKE
F
E
K2
K1
20-PNK
58-BRN
35-BRN
RELAY JUMPERS
PIN 6 K1-PIN 6 K2
PIN 8 K1-PIN 4 K2
PIN 9 K1-PIN 1 K2
PIN 4 K1-PIN 8 K2
PIN 10 K1-PIN 10 K2
PIN 12 K1-PIN 12 K2
PIN 13 K1-PIN 13 K2
PIN 14 K1-PIN 9 K2
PIN 11 K2-PIN 14 K2
1
2
3

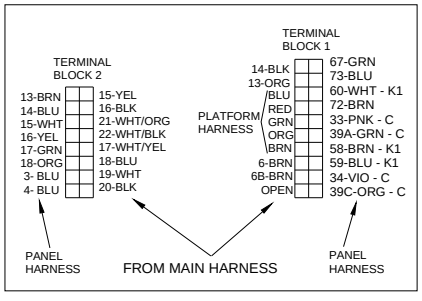
TERMINAL BLOCK 2
13-BRN 15-YEL
14-BLU 16-BLK
15-WHT 21-WHT/ORG
16-YEL 22-WHT/BLK
17-GRN 17-WHT/YEL
18-ORG 18-BLU
3- BLU 19-WHT
4- BLU 20-BLK
TERMINAL BLOCK 1
14-BLK 67-GRN
13-ORG 73-BLU
BLU 60-WHT - K1
RED 72-BRN
GRN 33-PNK - C
ORG 39A-GRN - C
BRN 58-BRN - K1
6-BRN 59-BLU - K1
6B-BRN 34-VIO - C
OPEN 39C-ORG - C
PLATFORM HARNESS
PANEL HARNESS
FROM MAIN HARNESS
PANEL HARNESS

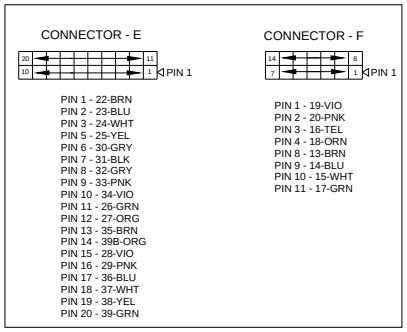
CONNECTOR - E
PIN 1
PIN 1 - 22-BRN
PIN 2 - 23-BLU
PIN 3 - 24-WHT
PIN 5 - 25-YEL
PIN 6 - 30-GRY
PIN 7 - 31-BLK
PIN 8 - 32-GRY
PIN 9 - 33-PNK
PIN 10 - 34-VIO
PIN 11 - 26-GRN
PIN 12 - 27-ORG
PIN 13 - 35-BRN
PIN 14 - 39B-ORG
PIN 15 - 28-VIO
PIN 16 - 29-PNK
PIN 17 - 36-BLU
PIN 18 - 37-WHT
PIN 19 - 38-YEL
PIN 20 - 39-GRN
CONNECTOR - F
PIN 1
PIN 1 - 19-VIO
PIN 2 - 20-PNK
PIN 3 - 16-TEL
PIN 4 - 18-ORN
PIN 8 - 13-BRN
PIN 9 - 14-BLU
PIN 10 - 15-WHT
PIN 11 - 17-GRN

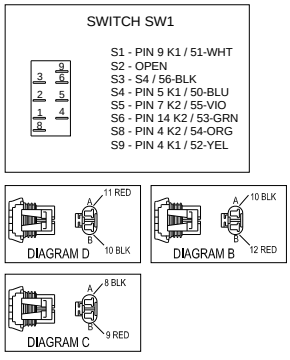
SWITCH SW1
S1 - PIN 9 K1 / 51-WHT
S2 - OPEN
S3 - S4 / 56-BLK
S4 - PIN 5 K1 / 50-BLU
S5 - PIN 7 K2 / 55-VIO
S6 - PIN 14 K2 / 53-GRN
S8 - PIN 4 K2 / 54-ORG
S9 - PIN 4 K1 / 52-YEL
11 RED
10 BLK
DIAGRAM D
10 BLK
12 RED
DIAGRAM B
8 BLK
9 RED
DIAGRAM C

REF	PART NO.	PRV NO.	QTY	DESCRIPTION	SERIAL NO. FROM	NOTES
1	86313700	-	1	HARNESS, PANEL 2 STAGE		
2	86010860	880353	1	WIRE, 4X20 BK CTERM C5/16RING		
3	86010850	880352	1	WIRE, 4X2ORD CTERM C3/8RING		

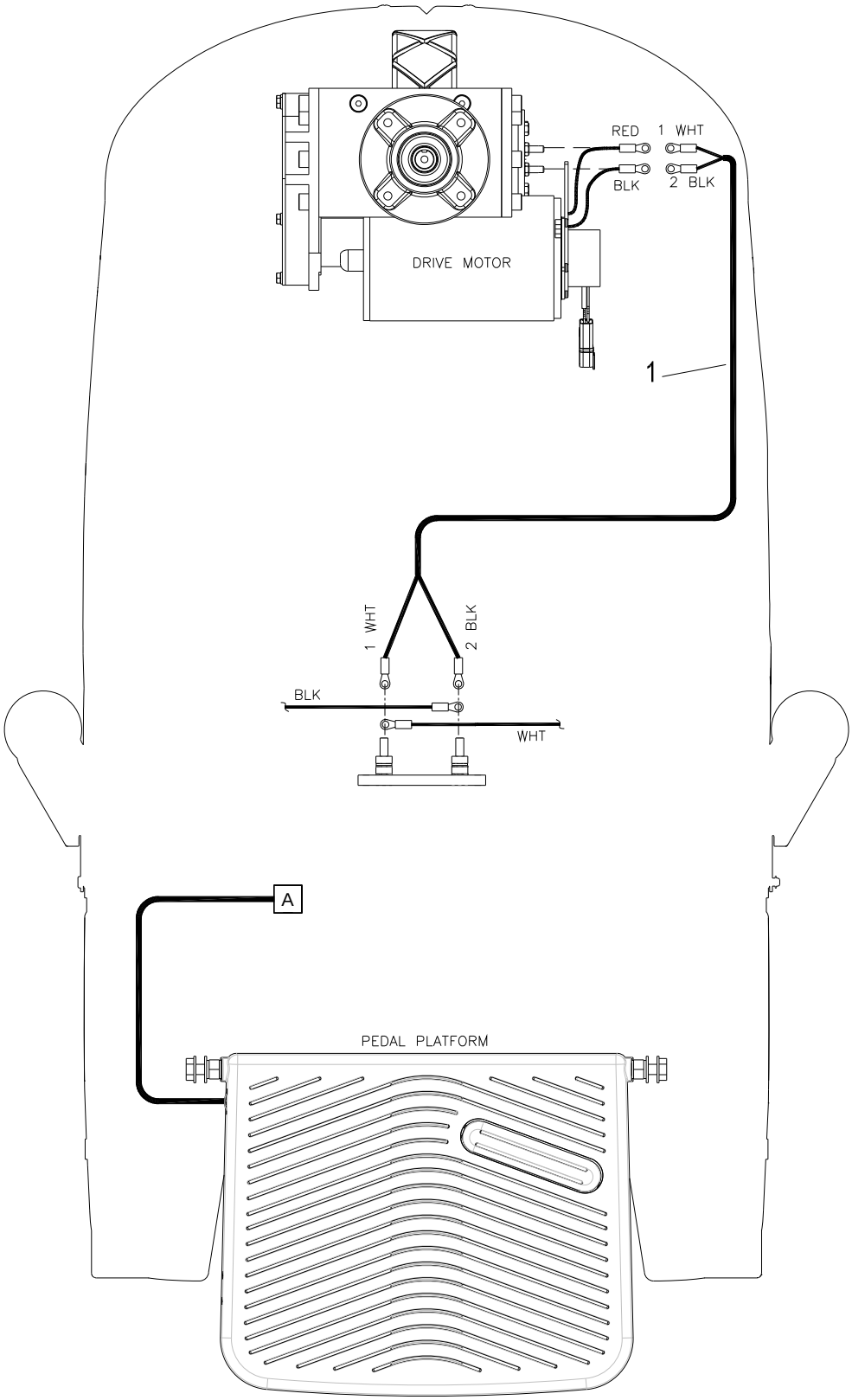
RED
1 WHT
BLK
2 BLK
DRIVE MOTOR
1
1 WHT
2 BLK
BLK
WHT
A
PEDAL PLATFORM

REF	PART NO.	PRV NO.	QTY	DESCRIPTION	SERIAL NO. FROM	NOTES
1	86239120	41522	1	HARNESS, CHARIOT PROPEL		

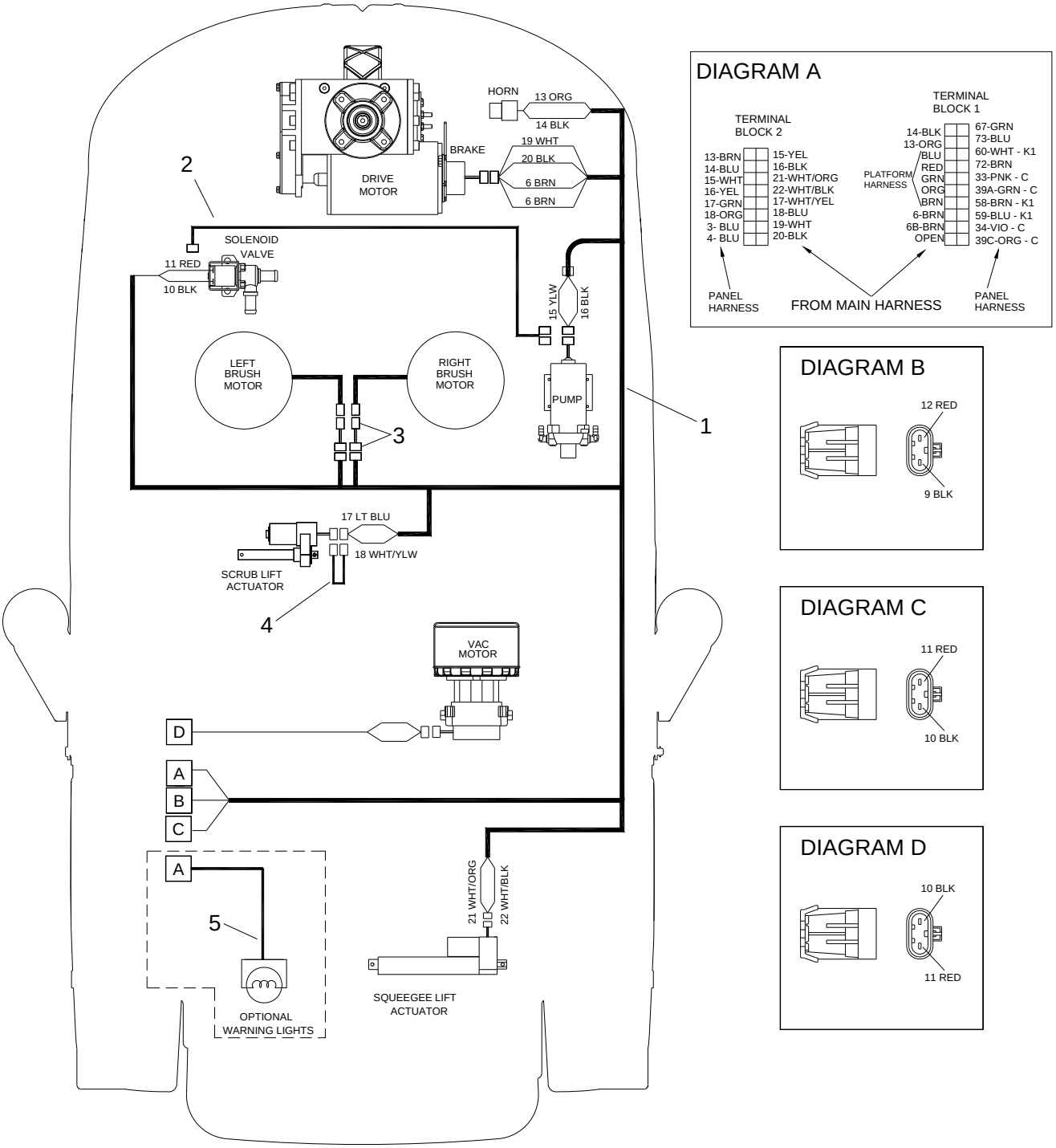

DIAGRAM A

DIAGRAM B

DIAGRAM C

DIAGRAM D

REF	PART NO.	PRV NO.	QTY	DESCRIPTION	SERIAL NO. FROM	NOTES
1	86313710	-	1	HARNESS, MAIN		
2	86318640	-	1	HARNESS, PUMP JUMPER		CYL. ONLY
3	86318650	-	2	HARNESS, BRUSH MOTOR		CYL. ONLY
4	86318660	-	1	HARNESS BRUSH ACTUATOR		CYL. ONLY
5	86319780	-	1	HARNESS, WARNING LIGHTS OPTION		OPTION

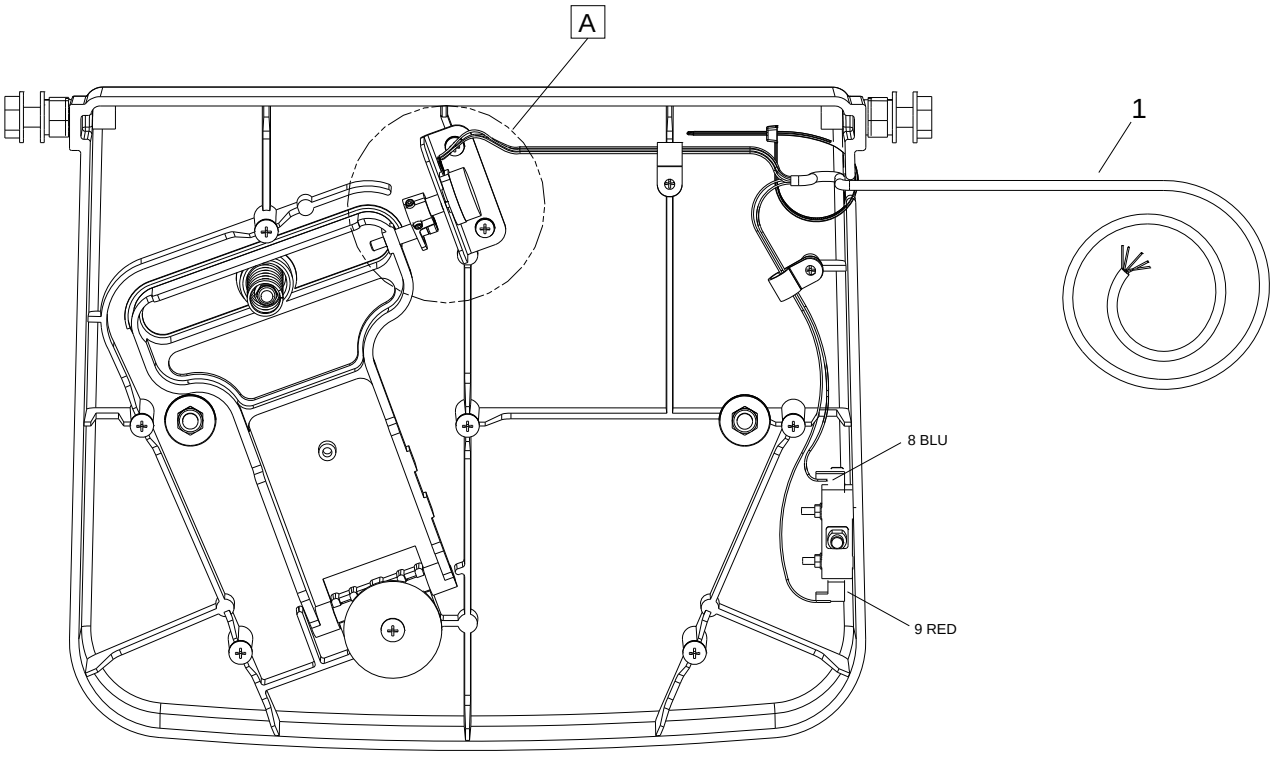
A
1
8 BLU
9 RED

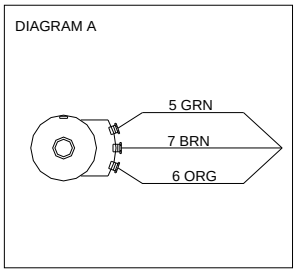
DIAGRAM A
5 GRN
7 BRN
6 ORG

REF	PART NO.	PRV NO.	QTY	DESCRIPTION	SERIAL NO. FROM	NOTES
1	86315100	-	1	HARNESS, PEDAL		

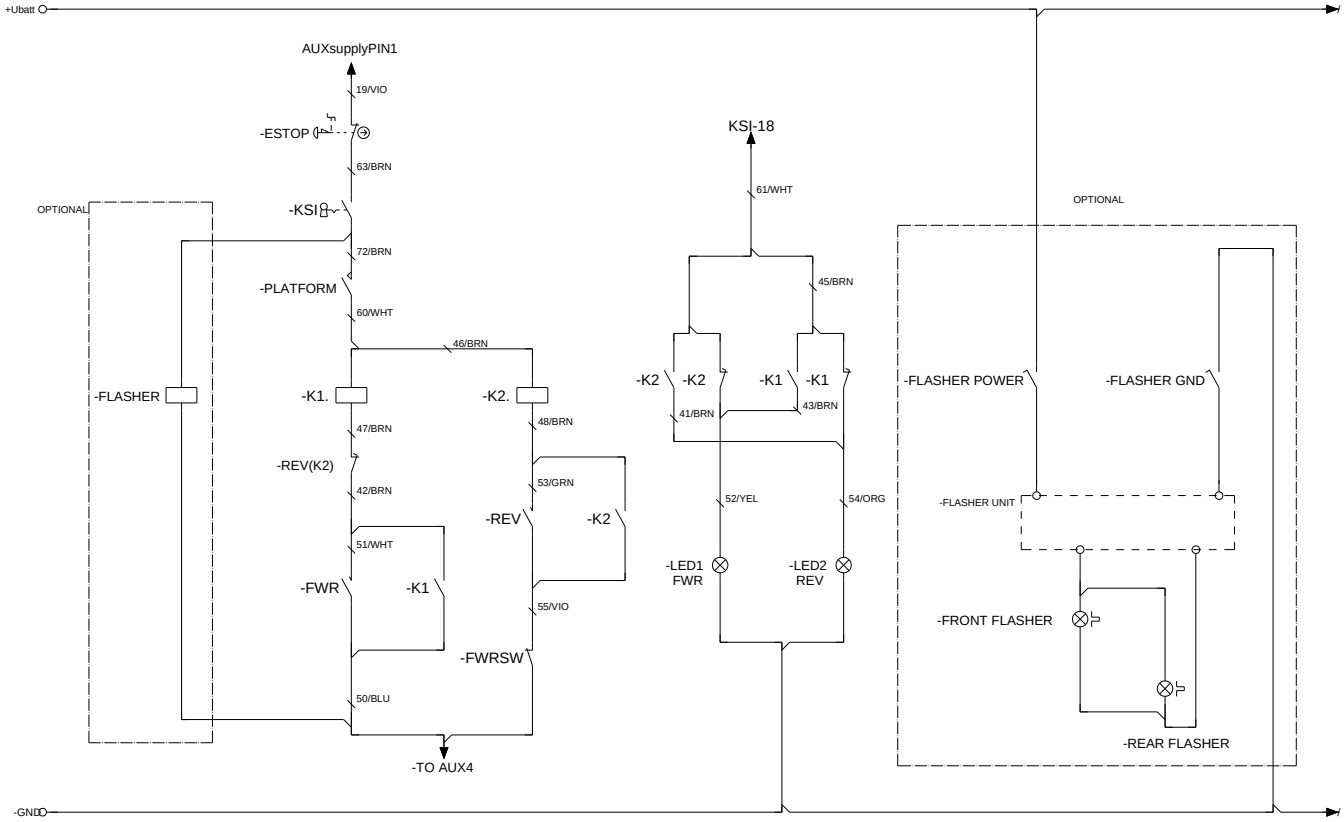
+Ubatt
AUXsupplyPIN1
19/VIO
-ESTOP
63/BRN
OPTIONAL
-KSI
72/BRN
-PLATFORM
60/WHT
46/BRN
-FLASHER
-K1.
-K2.
47/BRN
48/BRN
-REV(K2)
42/BRN
53/GRN
-REV
-K2
51/WHT
-FWR
-K1
55/VIO
-FWRSW
50/BLU
-TO AUX4
-GND
KSI-18
61/WHT
45/BRN
-K2
-K2
-K1
-K1
41/BRN
43/BRN
52/YEL
54/ORG
-LED1 FWR
-LED2 REV
OPTIONAL
-FLASHER POWER
-FLASHER GND
-FLASHER UNIT
-FRONT FLASHER
-REAR FLASHER

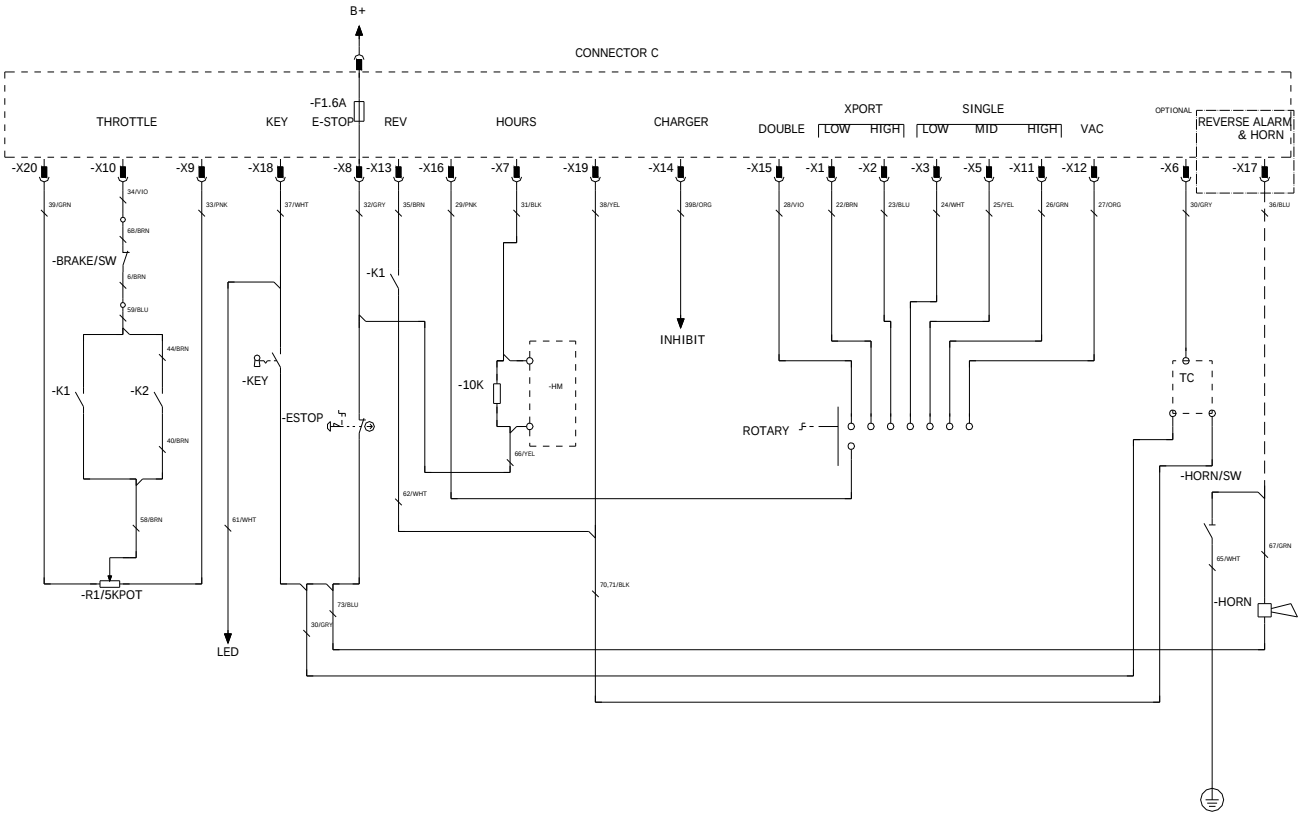
B+
CONNECTOR C
-F1.6A
E-STOP
THROTTLE
KEY
REV
HOURS
CHARGER
XPORT
DOUBLE
LOW
HIGH
SINGLE
LOW
MID
HIGH
VAC
OPTIONAL
REVERSE ALARM & HORN
-X20
-X10
-X9
-X18
-X8
-X13
-X16
-X7
-X19
-X14
-X15
-X1
-X2
-X3
-X5
-X11
-X12
-X6
-X17
-BRAKE/SW
-K1
-K2
-KEY
-ESTOP
-K1
-10K
-HM
INHIBIT
ROTARY
TC
-HORN/SW
-HORN
-R1/5KPOT
LED

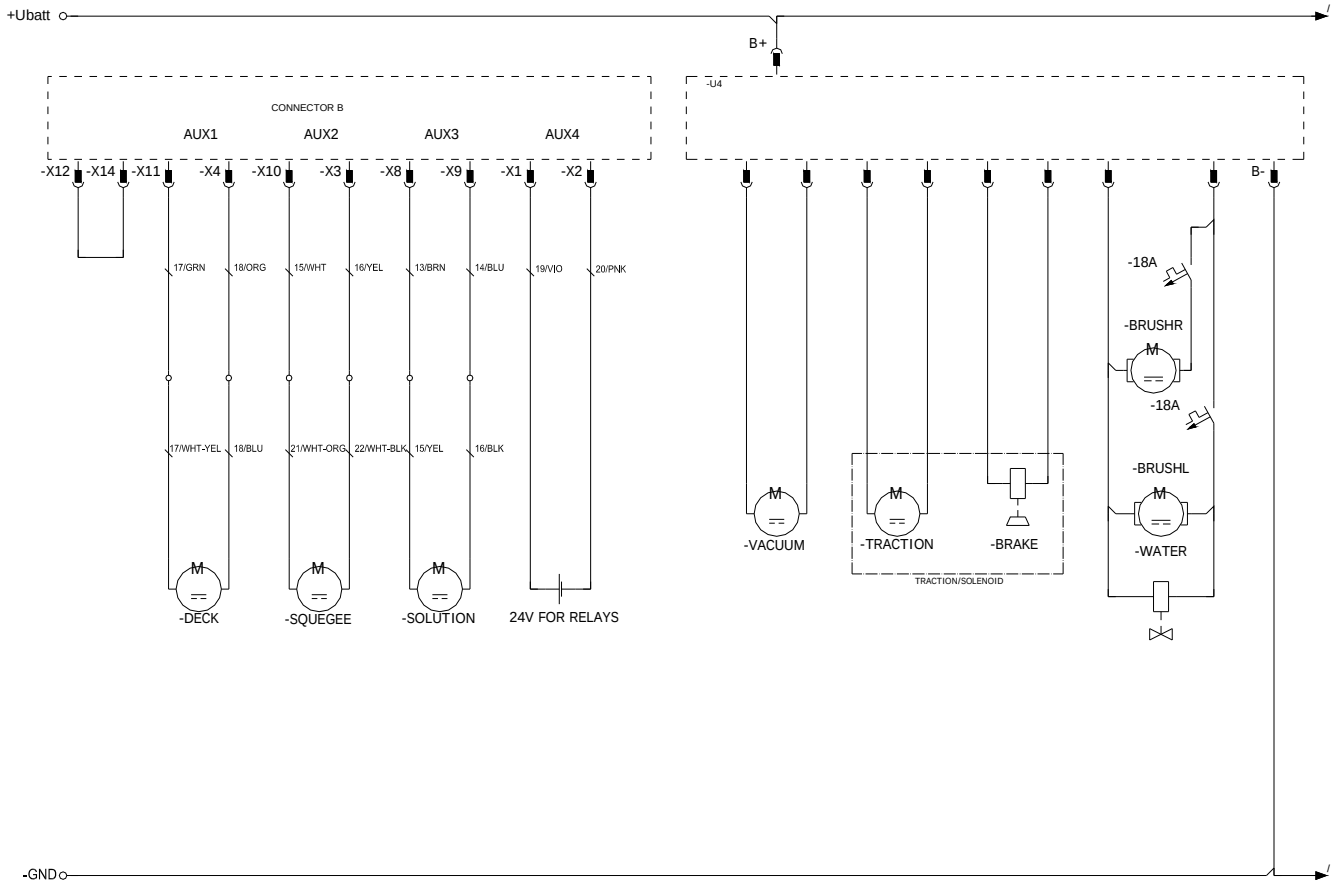
+Ubatt
B+
-U4
CONNECTOR B
AUX1
AUX2
AUX3
AUX4
-X12
-X14
-X11
-X4
-X10
-X3
-X8
-X9
-X1
-X2
B-
17/GRN
18/ORG
15/WHT
16/YEL
13/BRN
14/BLU
19/VIO
20/PNK
17/WHT-YEL
18/BLU
21/WHT-ORG
22/WHT-BLK
15/YEL
16/BLK
-DECK
-SQUEGEE
-SOLUTION
24V FOR RELAYS
-VACUUM
-TRACTION
-BRAKE
TRACTION/SOLENOID
-18A
-BRUSHR
-18A
-BRUSHL
-WATER
-GND

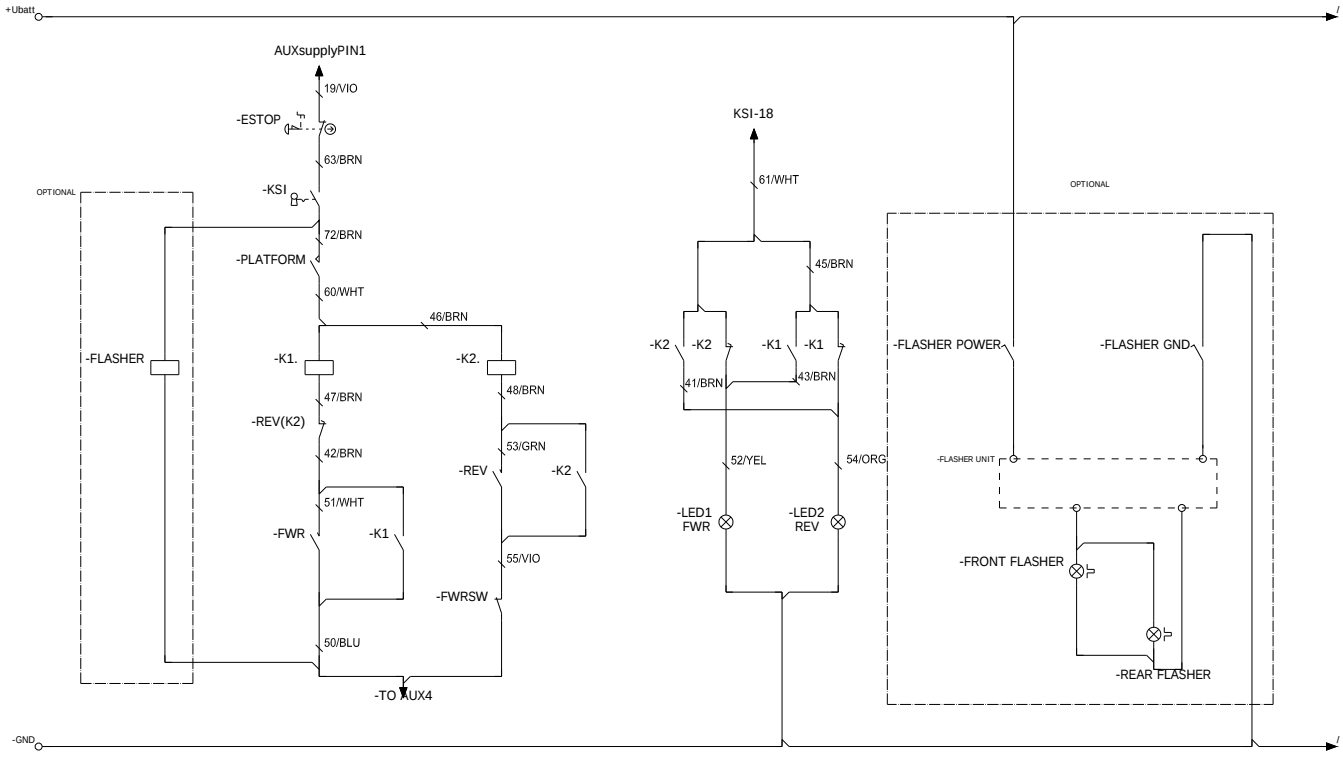
+Ubatt
AUXsupplyPIN1
19/VIO
-ESTOP
63/BRN
OPTIONAL
-KSI
72/BRN
-PLATFORM
60/WHT
46/BRN
-FLASHER
-K1.
-K2.
48/BRN
47/BRN
-REV(K2)
53/GRN
42/BRN
-REV
-K2
51/WHT
-FWR
-K1
55/VIO
-FWRSW
50/BLU
-TO AUX4
-GND
KSI-18
61/WHT
45/BRN
-K2
-K2
-K1
-K1
41/BRN
43/BRN
52/YEL
54/ORG
-LED1 FWR
-LED2 REV
OPTIONAL
-FLASHER POWER
-FLASHER GND
-FLASHER UNIT
-FRONT FLASHER
-REAR FLASHER

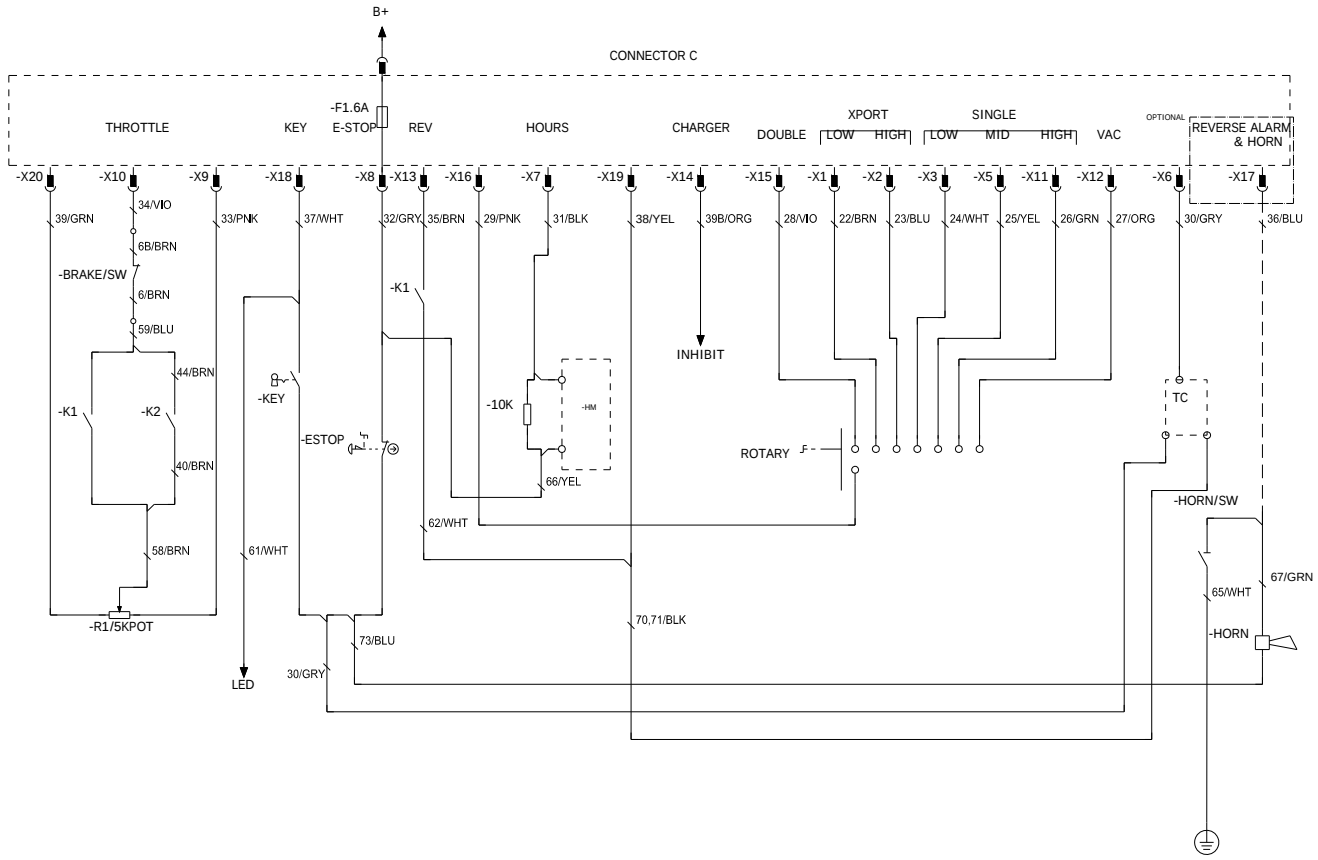
B+
CONNECTOR C
-F1.6A
THROTTLE
KEY
E-STOP
REV
HOURS
CHARGER
XPORT
DOUBLE
LOW
HIGH
SINGLE
LOW
MID
HIGH
VAC
OPTIONAL
REVERSE ALARM & HORN
-X20
-X10
-X9
-X18
-X8
-X13
-X16
-X7
-X19
-X14
-X15
-X1
-X2
-X3
-X5
-X11
-X12
-X6
-X17
39/GRN
34/VIO
6B/BRN
-BRAKE/SW
6/BRN
59/BLU
44/BRN
-K1
-K2
40/BRN
58/BRN
-R1/5KPOT
33/PNK
37/WHT
-KEY
-ESTOP
61/WHT
LED
32/GRY
35/BRN
29/PNK
31/BLK
38/YEL
39B/ORG
INHIBIT
-K1
-10K
-HM
66/YEL
62/WHT
73/BLU
30/GRY
70,71/BLK
28/VIO
22/BRN
23/BLU
24/WHT
25/YEL
26/GRN
27/ORG
ROTARY
30/GRY
36/BLU
TC
-HORN/SW
67/GRN
65/WHT
-HORN

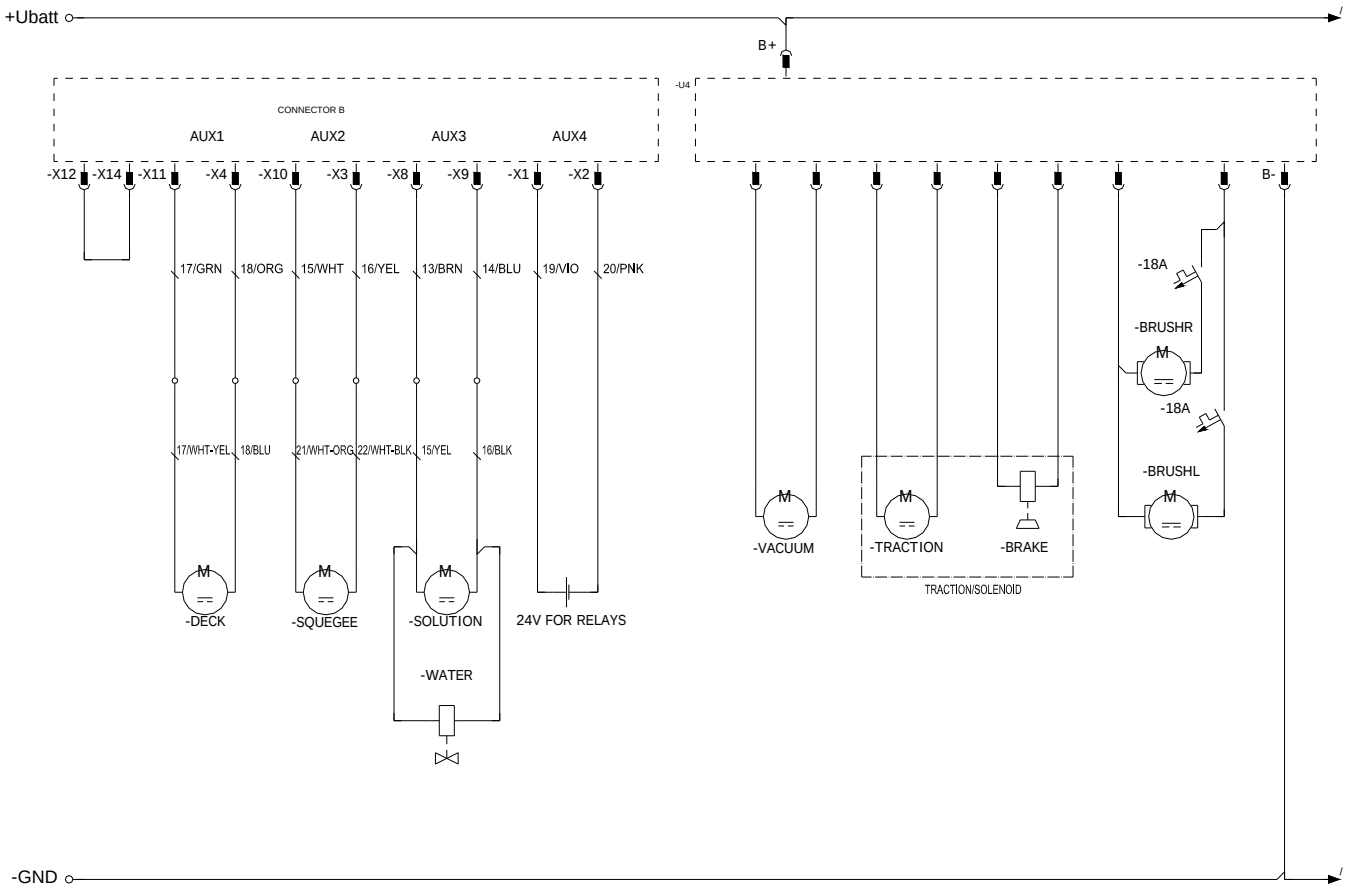
+Ubatt
B+
-U4
CONNECTOR B
AUX1
AUX2
AUX3
AUX4
-X12
-X14
-X11
-X4
-X10
-X3
-X8
-X9
-X1
-X2
B-
17/GRN
18/ORG
15/WHT
16/YEL
13/BRN
14/BLU
19/VIO
20/PNK
17/WHT-YEL
18/BLU
21/WHT-ORG
22/WHT-BLK
15/YEL
16/BLK
-18A
-BRUSHR
-18A
-BRUSHL
-VACUUM
-TRACTION
-BRAKE
TRACTION/SOLENOID
-DECK
-SQUEGEE
-SOLUTION
24V FOR RELAYS
-WATER
-GND

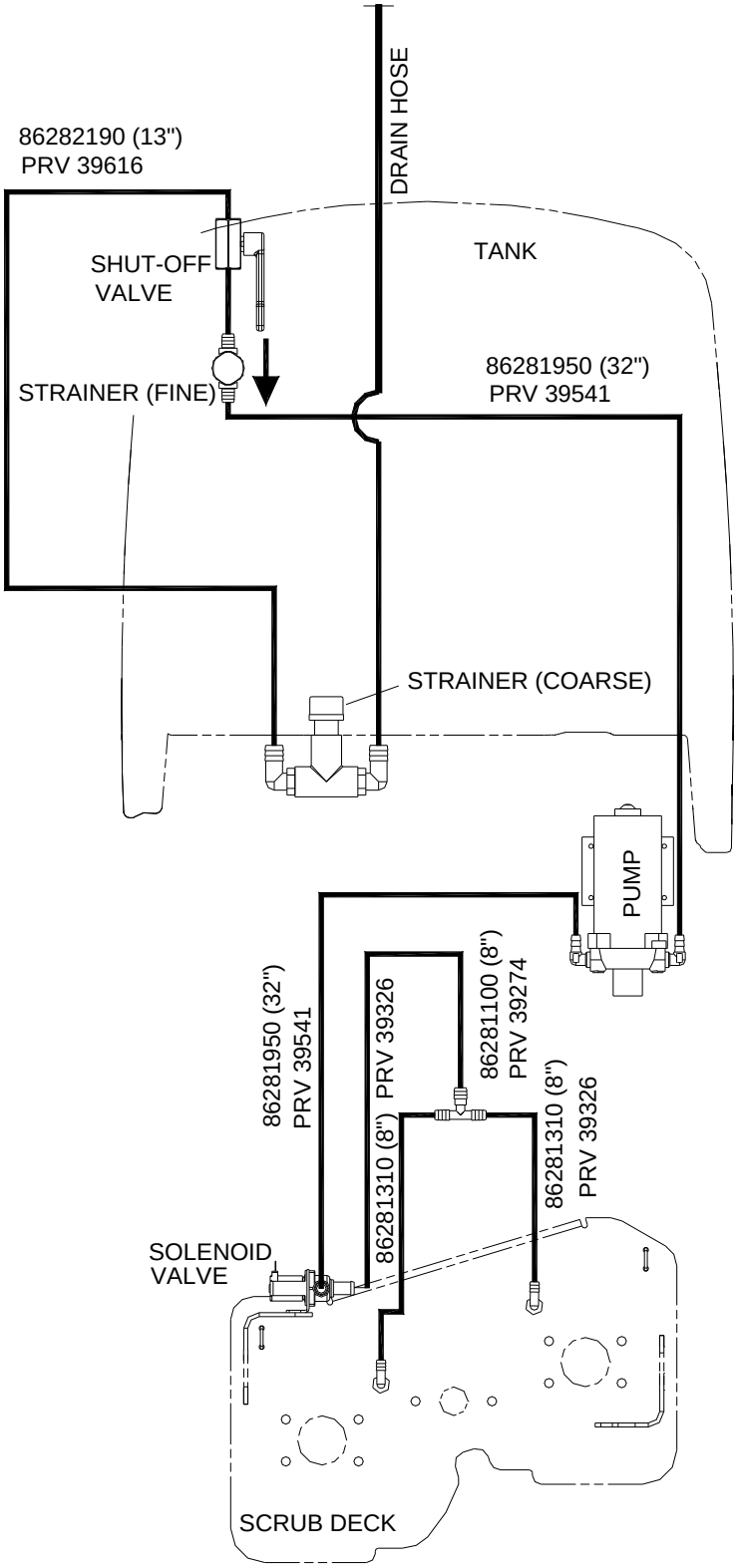
DRAIN HOSE
86282190 (13")
PRV 39616
TANK
SHUT-OFF
VALVE
STRAINER (FINE)
86281950 (32")
PRV 39541
STRAINER (COARSE)
PUMP
86281950 (32")
PRV 39541
86281310 (8") PRV 39326
86281100 (8")
PRV 39274
86281310 (8")
PRV 39326
SOLENOID
VALVE
SCRUB DECK

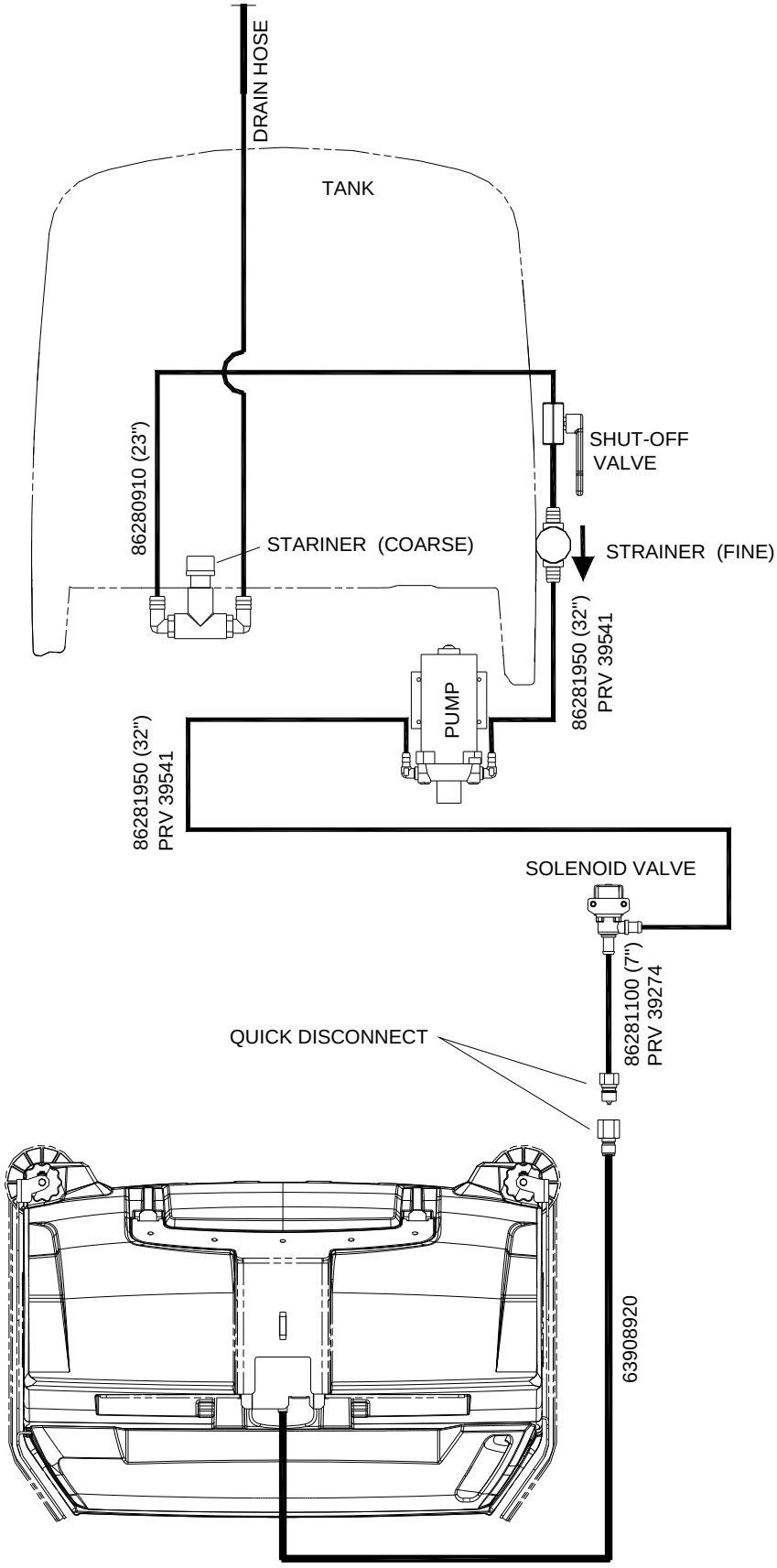
DRAIN HOSE
TANK
86280910 (23")
SHUT-OFF VALVE
STARINER (COARSE)
STRAINER (FINE)
86281950 (32") PRV 39541
PUMP
86281950 (32") PRV 39541
SOLENOID VALVE
86281100 (7") PRV 39274
QUICK DISCONNECT
63908920

PART NO.	PRV NO.	DESCRIPTION	SERIAL NO. FROM	NOTES
86316160	-	BREAKER, 18A, 250VAC, 32VDC		
86332510	-	BOOT, SEAL PUSH BUTTON 11MM		
86004440	39717	CAP DRAIN HOSE		
86199840	090-12A	FLOAT, SHUT OFF		
86317770	-	GASKET, DOME EDGE		
86305960	-	HOSE ASM., 1.5" BLK PVC VAC X 67		
86004860	48073	KEY, SWITCH		
86004890	48095	KNOB, ALUM 3/8-16 NYLOCK NUT SS		
86314050	-	RECOVERY DRAIN PLUG 1-3/4		
86313900	-	RELAY, 15A 36V MINI		
86007170	72159	SWITCH, 2 POSITION KEY		
86007190	72161	SWITCH, DPST KEY		
86313820	-	SWITCH, SEALED PB ROUND		
86009200	81535	KNOB, 3/8-16 4 PRONG ALUM		
86312800	-	BAG, INNER TANK		
86001520	140752	BLADE, AQUAMIZER, 12IN LEFT		
86001540	140753	BLADE, AQUAMIZER, 12IN RIGHT		
86001560	140754	BLADE, SKIRT, SCRUB DECK, 24 IN LEFT		
86001570	140755	BLADE, SKIRT, SCRUB DECK, 24 IN RIGHT		
86001580	140763	BLADE, SQG REAR 40.6IN LINATEX		
86001630	140764	BLADE, SQG FRONT 36.7IN RED GUM		
86001700	140780	BLADE, SKIRT, SCRUB DECK, FRONT		
86001740	140816	BRAKE, 36 VDC W/CONNECTOR		
86231560	270097	CABLE, SQUEEGEE LIFT BASIC		
86002780	270098	CABLE, SQUEEGEE LIFT DELUXE		
86007940	73836	STRAINER, DEEP, 100 MESH		
86256120	730368	STRAINER, 1/2 FPT 100 MESH		
86292590	-	SWITCH, E-STOP		
86314150	-	KNOB, SELECTOR		
86295200	-	ASM, BUTTON, BLACK, W/BEZEL		
86064300	-	PAD, TIPPING BAR		
86242140	-	KNOB, 3/8-16 X 1.5		
86071030	-	BRKT ASSEMBLY, REAR COVER		
86010600	-	VALVE, SOLENOID, 36VDC, 1/2 BARB		
86237440	-	GASKET, 4.06 X 2.50 X .38		

OPTIONS

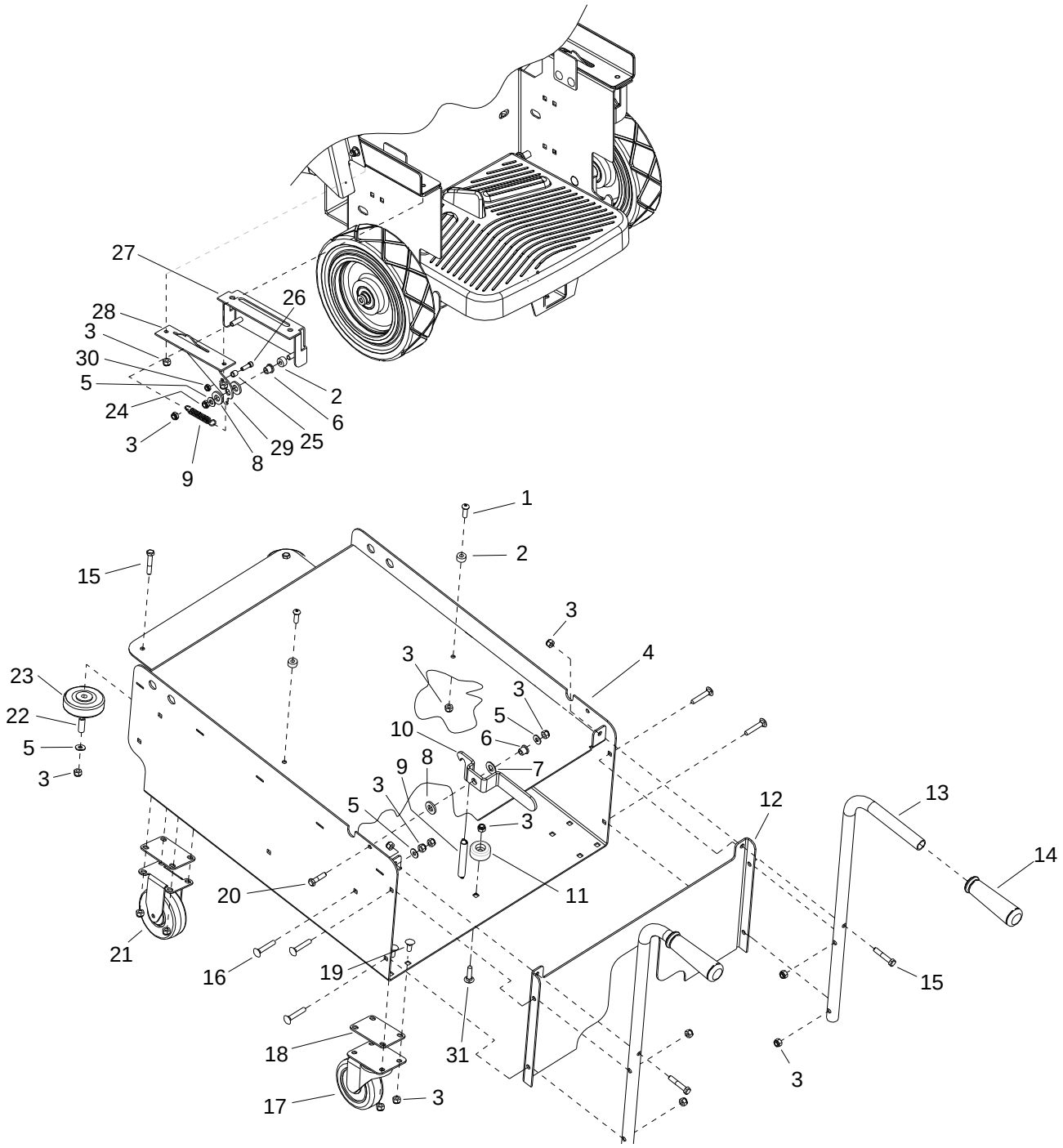
27
28
3
30
5
24
3
9
8
29
25
6
2
26
1
2
15
3
4
3
3
5
6
10
7
8
9
3
5
3
23
22
5
3
12
13
14
11
20
21
16
19
15
18
31
3
17
3

REF	PART NO.	PRV NO.	QTY	DESCRIPTION	SERIAL NO. FROM	NOTES
1	86006930	70514	2	SCR, 5/16-18 X 1.00 BSHCS SS		
2	86254290	730338	4	SPACER, 10D X .343ID, .5 LG		
3	86270830	57023	33	NUT, 5/16-18 HEX NYLOCK SS		
4	86077010	41517	1	HOUSING, BATTERY CART		
5	86010670	87029	7	WASHER, 5/16 FLAT SS		
6	86228840	09124	3	BEARING, FLANGED .314D X .502OD		
7	86259410	87206	1	WASHER, THRUST, .51 ID X 1 OD X .063		
8	86259400	87205	4	WASHER, THRUST .51 ID X 1 OD		
9	86254890	730018	3	SPRING, EXT, .50D X 4.0L		
10	86068490	140019	1	BRKT, TRAY CATCH		
11	86231090	80809	1	BUMPER, RUBBER 5/16" ID X 1.50		
12	86083120	66442	1	PLATE, BATTERY CART BACK		
13	86076600	38318	2	HANDLE, BATTERY CART		
14	86004070	36196	2	GRIP, POLISHER HANDLE		
15	86276790	70732	4	SCR, 5/16-18 X 1.75 HHCS SS		
16	86276690	70715	7	SCR, 5/16-18 X 1.75 CARR SS		
17	86199430	040-03	2	CASTER SWIVEL 4" 250# CPCTY		
18	86078890	620020	8	PLATE, CASTER SPACER		
19	86277130	70795	16	SCR, 5/16-18 X 1.00 CARRIAGE SS		
20	86136730	70763	1	SCR, M6-1 X 40MM PLTD		
21	86232590	18032	2	CASTER, 4" HARD RUBBER RIGID		
22	86001350	140390	2	BUSHING, SPANNER .435 X 1.10		
23	86011020	89202	2	WHEEL, 3" DIA CUSHION RUBBER		
24	86271840	57285	2	NUT, 5/16-18 HEX NYLOCK THIN SS		
25	86008130	73958	2	SPACER, 3/8OD X .62W X .312L, AL		
26	86274730	70265	2	SCR, 1/4-20 X 3/4 SHCS PLTD		
27	86070790	140737	2	BRKT, BATTERY LOCK MOUNT		
28	86087340	730339	2	SPACER, LATCH GUIDE		
29	86070800	140738	2	BRKT, BATTERY TRAY LOCK		
30	86271870	57290	2	NUT, 1/4-20 HEX NYLOCK THIN SS		
31	86276070	70593	1	SCR, 5/16-18 X 3/4 CARRIAGE SS		

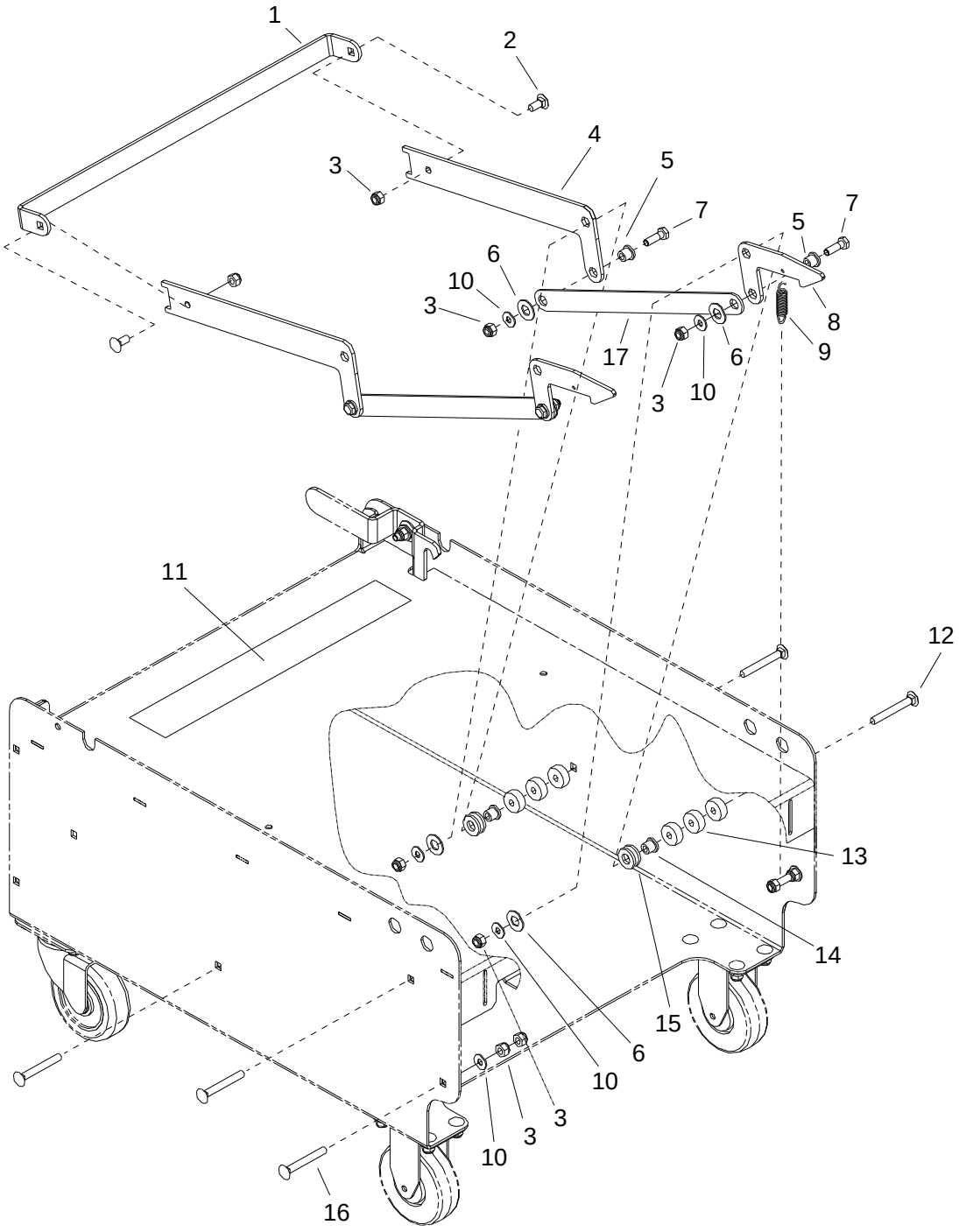
1
2
4
3
5
7
7
5
6
10
3
8
9
17
6
3
10
11
12
13
14
15
6
10
3
3
10
16

REF	PART NO.	PRV NO.	QTY	DESCRIPTION	SERIAL NO. FROM	NOTES
1	86078330	66478	1	PEDAL, BATTERY CART		
2	86276070	70593	2	SCR, 5/16-18 X 3/4 CARRIAGE SS		
3	86270830	57023	12	NUT, 5/16-18 HEX NYLOCK SS		
4	86087800	730307	2	STIFFENER, PEDAL, BATTERY CART		
5	86228840	09124	4	BEARING, FLANGED .314ID X .502OD		
6	86259410	87206	6	WASHER, THRUST .51 ID X 1 OD X .063		
7	86006560	70083	4	SCR, 5/16-18 X 1 HHCS SS		
8	86077140	51404	2	LATCH, BATTERY CART		
9	86226830	73268	2	SPRING, EXT .68D X 3.00L X .098W		
10	86010670	87029	10	WASHER, 5/16 FLAT SS		
11	86244280	500934	1	LABEL, BATTERY CART OPERATION		
12	86276060	70590	4	SCR, 5/16-18 X 2.5 CARR GR5		
13	86254280	730331	12	SPACER, 1.00 ODX .32ID X .375		
14	86231150	09151	4	BUSHING FLANGE, .314 X .502 OD		
15	86259400	87205	8	WASHER, THRUST .51 ID X 1 OD		
16	86276690	70715	16	SCR, 5/16-18 X 1.75 CARR SS		
17	86077530	51403	2	LINKAGE, LATCH, BATT CART		

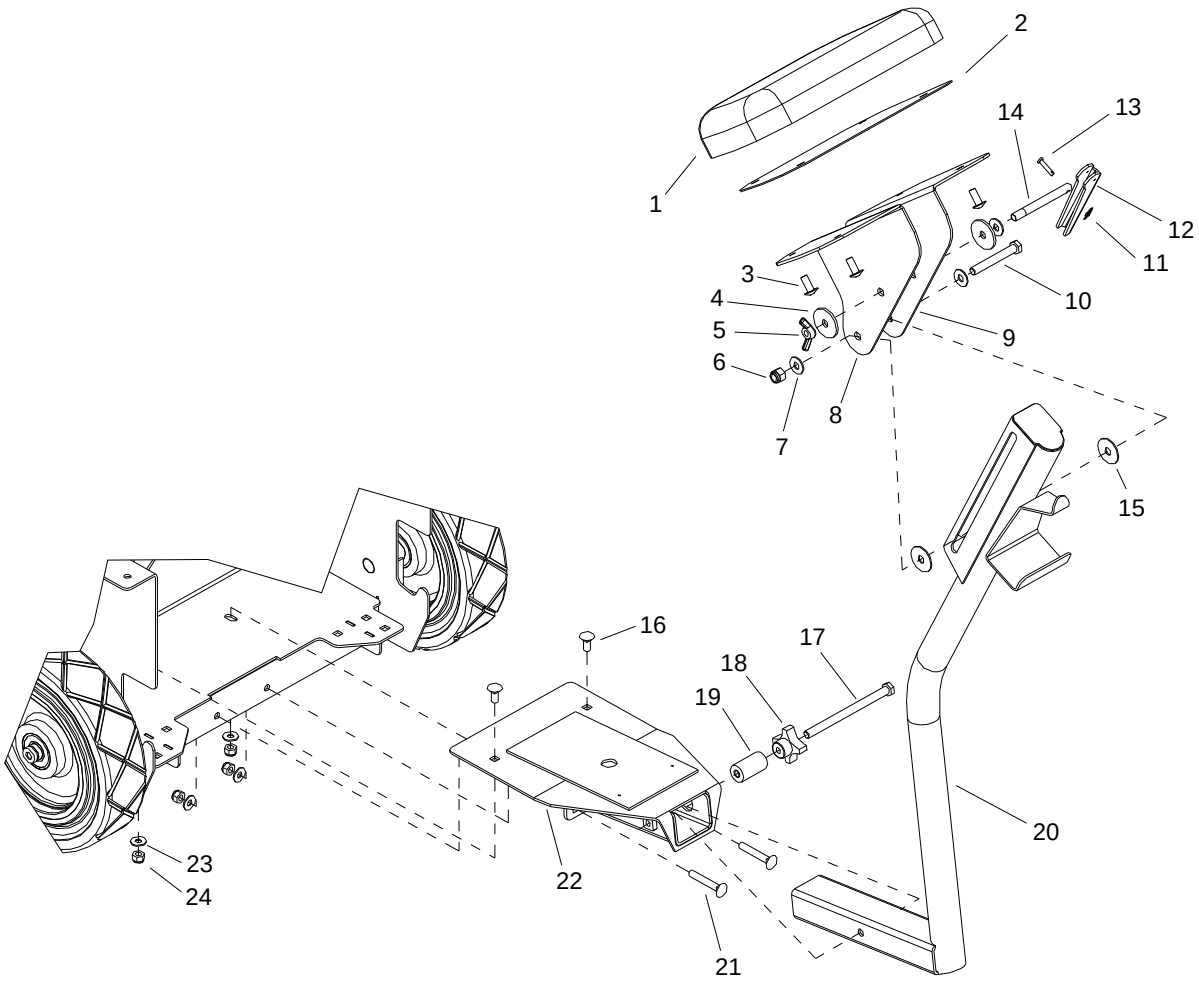
1
2
3
4
5
6
7
8
9
10
11
12
13
14
15
16
17
18
19
20
21
22
23
24

REF	PART NO.	PRV NO.	QTY	DESCRIPTION	SERIAL NO.FROM	NOTES:
1	86248390	730324	1	PAD, REAR REST		
2	86082640	629995	1	PLATE, SEAT COVER		
3	86276890	70752	4	SCR, 5/16-18 X 3/4 PTHMS SS		
4	86279460	87164	2	WASHER, 1/2 SPLIT LOCK		
5	86270710	01-000277	1	NUT, WING 3/8-16		
6	86271930	57297	1	NUT, 3/8-16 HEX NYLOCK SS		
7	86278910	87003	3	WASHR, 3/8 ID X 7/8 OD SS		
8	86070830	140742	1	BRKT, LEFT REAR SEAT		
9	86070840	140743	1	BRKT, RIGHT REAR SEAT		
10	86277710	730347	1	SCR, 3/8-16 X 2.75 HHCS SS		
11	86008650	80604	1	COTTER, 1/4" RING		
12	86246320	51142	1	LEVER, HANDLE LOCK		
13	86272300	66133	1	PIN, CLEVIS 3/16 X .88 PLTD		
14	86251860	66481	1	ROD, ARM HANDLE LOCK 4" LG		
15	86279620	87200	2	WASHER, .4ID X 1.3OD NYLON		
16	86276070	70593	2	SCR, 5/16-18 X 3/4 CARRIAGE SS		
17	86277510	70857	1	SCR, 3/8-16 X 5.0 HHCS SS FT		
18	86009200	81535	1	KNOB, 3/8-16 4 PRONG ALUM		
19	86254300	730350	1	SPACER, SEAT LOCK		
20	86094000	05246	1	SEAT MOUNT POST		
21	86276710	70717	2	SCR, 5/16-18 X 2.0 CARRIAGE SS		
22	86093790	05247	1	RECEIVER ASSY, SEAT MOUNT		
23	86010670	87029	4	WASHER, 5/16 FLAT SS		
24	86270830	57023	4	NUT, 5/16-18 HEX NYLOCK SS		

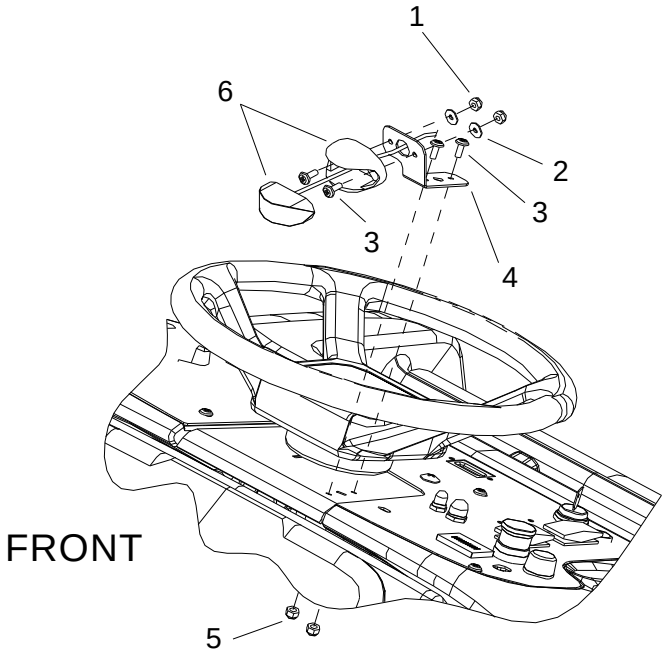
1
6
2
3
3
4
FRONT
5

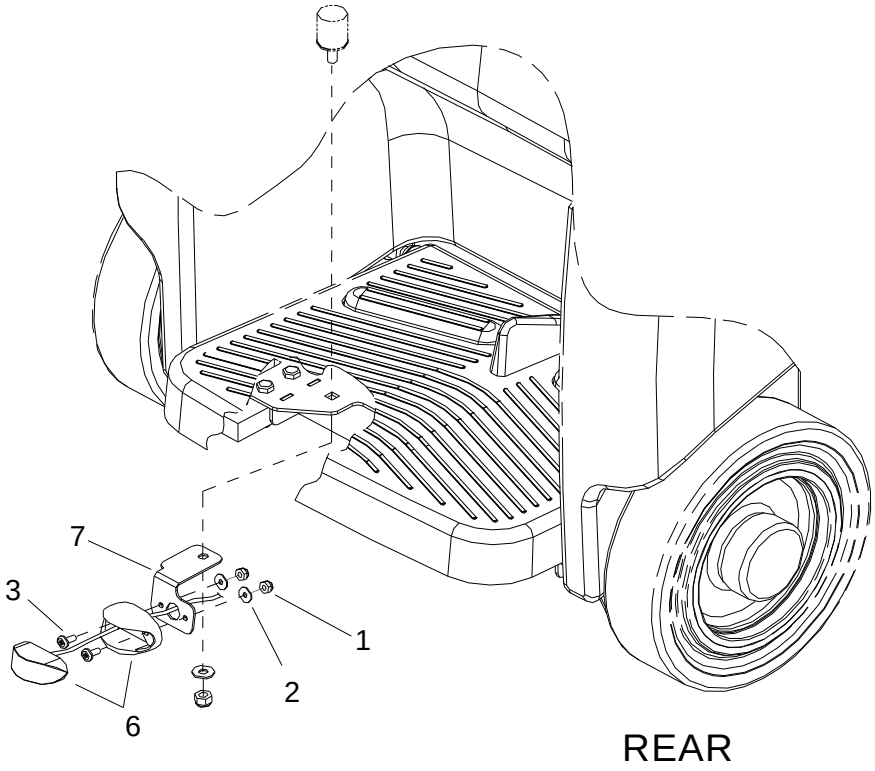
7
3
1
2
6
REAR

REF	PART NO.	PRV NO.	QTY	DESCRIPTION	SERIAL NO. FROM	NOTES
1	86270990	57090	4	NUT, 10-32 HEX NYLOCK SS		
2	86010650	87018	4	WASHER, #10 X 6/16 OD		
3	86276820	70740	4	SCR, 10-32 X 1/2 PTHMS BLK		
4	86071490	140871	1	BRKT, UPPER WARNING LIGHT		
5	86270990	57090	2	NUT, 10-32 HEX NYLOCK SS		
6	86246200	51454	2	LED AMBER LIGHT, 12V		
7	86071500	140872	1	BRKT, LOWER WARNING LIGHT		

REF. NO	MODEL: SERIAL #
1	1.006-109.0:10061090000151, 1.006-110.0: 1006110000006
2	1.006-109.0:10061090000159, 1.006-110.0: 1006110000006
3	1.006-109.0:10061090000191,1.006-110.0:1006110000008,1.006-112.0:1006112000001 1.006-116.0:10061160000019, 1.006-117.0: 1006117000003