SoapWorks™ SOAP DISPENSER

Installation Instructions

1.1 Replacing Existing Soap Dispenser

A) Remove old components.
B) Clean area.
C) Ensure hole is $^{15}/_{16}$" to $1^{1}/_{4}$" diameter

OR

1.2 New Soap Dispenser installation
(if there is no pre-existing hole)

A) Locate position by using template on the back of dispenser carton.
B) Drill a 1" diameter hole in counter top.
C) Clean area around hole.

2.1 Peel off one side of the plastic sheet from the adhesive washer (B) and attach to the bottom of the spout. Peel off the other side of the plastic sheet from the adhesive washer.

2.2 Guide the threaded shank through hole in counter.

2.3 Position spout (A) to direct soap into sink. Secure spout to counter by pressing down.

2.4 Secure lock washer (D) and mounting nut (E) onto shank and then tighten.

3.1 Slide C-clip (F) to the open position on the gear housing (G).

3.2 Remove protective packaging from bottom of metal rod (I). Align metal rod (I) from shank with small guide hole in the gear housing (G).

3.3 Push the gear housing up into place.

3.4 Secure by pushing the C-clip closed (F).

To install refill:

4.1 Twist and lift to release lock on refill.

4.2 Insert soap refill tube into gear housing.

4.3 Twist and lock refill bottle.

4.4 Prime refill by pumping dispenser 8-10 times.

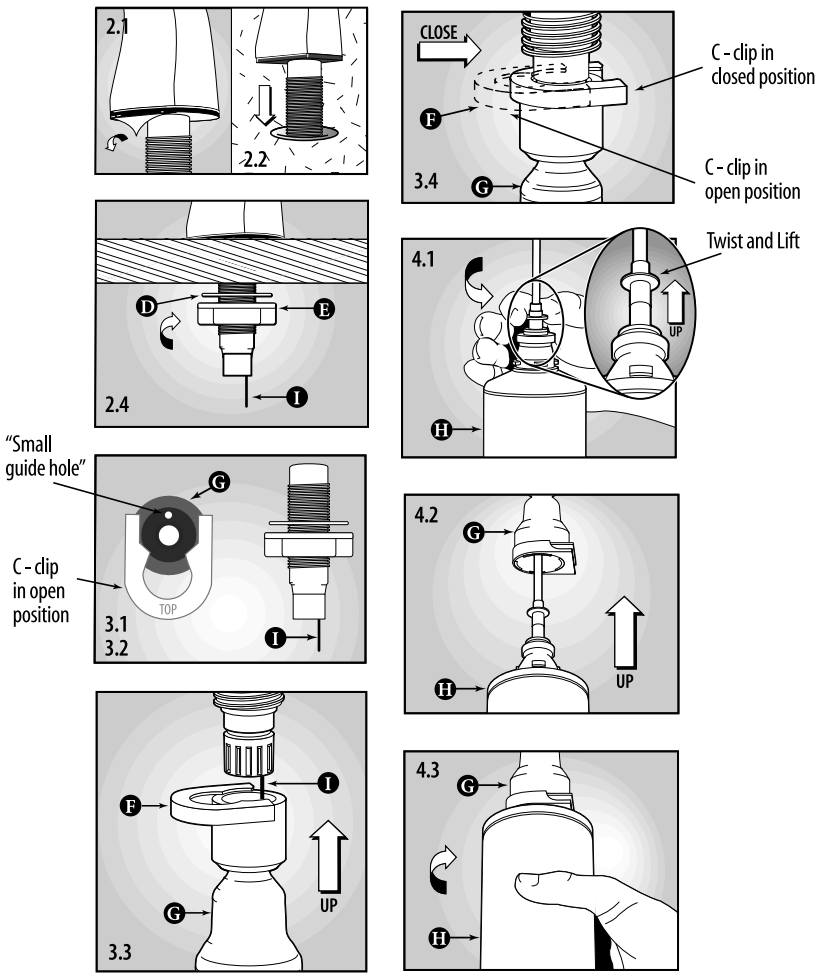

LIFETIME FULLY GUARANTEED AGAINST DEFECTS IN PARTS AND WORKMANSHIP WARRANTY

national® EVERYTHING WHOLESALE
Where Unsung Heroes Make It Happen™
800.647.2737 NationalEW.com

Spout Assembly

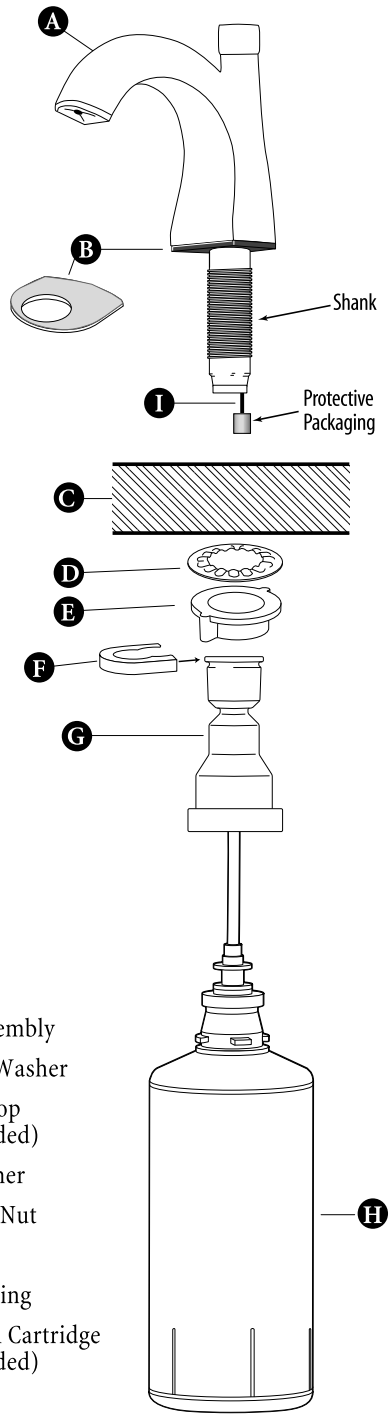

A Spout Assembly
B Adhesive Washer
C Counter Top (not included)
D Lock Washer
E Mounting Nut
F C - Clip
G Gear Housing
H Soap Refill Cartridge (not included)
I Metal Rod

SoapWorks is a trademark of Technical Concepts.