AMERICAN SPECIALTIES, *INC.*
441 Saw Mill River Road, Yonkers, NY 10701 (914) 476-9000
www.americanspecialties.com

MODEL No:	0032
ISSUED:	01-87
REVISED:	02-08

PARTITION MOUNTED DUAL TWIN HIDE-A-ROLL TOILET PAPER DISPENSER

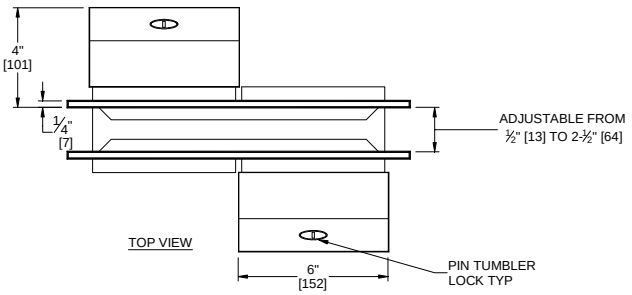

national EVERYTHING WHOLESALE
Where Unsung Heroes Make It Happen™
800.647.2737 NationalEW.com

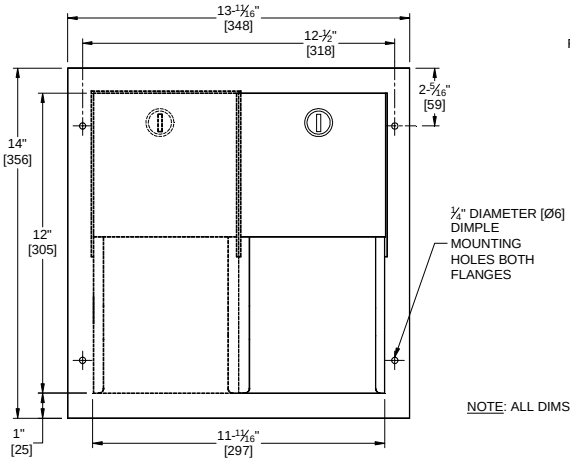

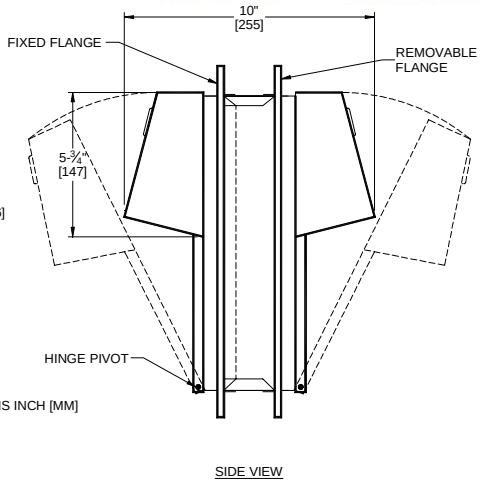

SPECIFICATION

Partition Mounted Dual Twin Hide-A-Roll Toilet Paper Dispenser shall hold and dispense four (4) standard or four (4) 5-1/4" diameter (Ø133) 1800 sheet tissue rolls and shall have doors, door frames, and dispensing mechanism guide tracks fabricated of 18 gauge type 304 stainless steel alloy 18-8. Cabinet bodies and mounting flanges shall be 22 gauge same grade. All exposed surfaces shall be № 4 satin finish and be protected during shipment with PVC film easily removable after installation. Internal mechanism levers shall be fabricated of molded high-impact resistant plastic for smooth operation. Structural assembly of body and door components shall be of welded construction. Door hinges shall be heavy-duty stainless steel 3/16" diameter (Ø4.8) rivets. Doors shall be held closed with tumbler locks keyed alike to other ASI washroom equipment. Cabinet shall include theft and vandal resistant rollers that shall be of molded high-impact resistant plastic with integral molded-in plated steel endpins and four (4) rollers [p/n R-004] shall be supplied.

Partition Mounted Dual Hide-a-Roll Toilet Paper Dispenser shall be Model № 0032 as manufactured by American Specialties, Inc. 441 Saw Mill River Road Yonkers, New York 10701-4913

INSTALLATION

Unit is partition mounted using four (4) №10 x 3/4" (M5 x 20) Philips flat head self tapping screws (supplied) per side (eight [8] total) through mounting holes provided through fixed mounting frame and adjustable mounting frame into suitably prepared partition (by others). Mounting flanges adjust to accommodate partition thickness of 1/2" (13) minimum to 2-1/2" (64) maximum. For compliance with ADA Accessibility Guidelines install top of unit 29" (737) above finished floor.

Partition Cutout Required is 11-7/8" W x 12-1/4" H x 1/2" to 2-1/2" Thick (304 x 311 x 13 to 64)

OPERATION

Reloading instructions are printed on graphic labels inside doors. Bottom roll is depleted prior to top roll automatically dropping into lower position for use. Empty rollers cannot be removed without key unlocking door. Individual two-roll dispenser is accessible from each side of partition.

Accessory Specialties AMERICAN DISPENSER Desert Ray Products WATROUS, INC.

THIS MANUFACTURER RESERVES THE RIGHT TO MAKE CHANGES IN DESIGN OR DIMENSIONS WITHOUT FORMAL NOTICE